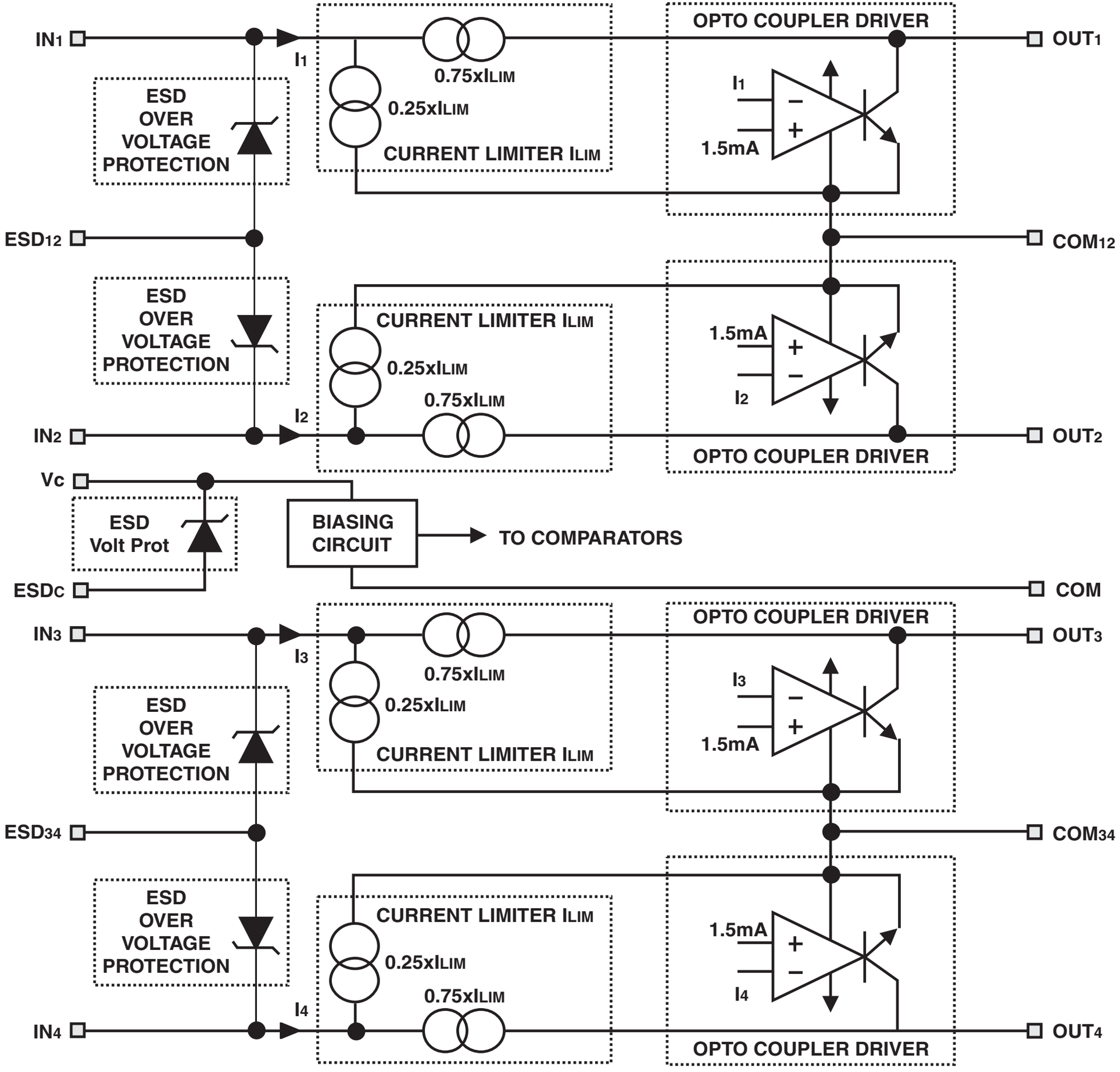
IN1
I1
0.75xILIM
0.25xILIM
CURRENT LIMITER ILIM
OPTO COUPLER DRIVER
OUT1
ESD
OVER
VOLTAGE
PROTECTION
I1
1.5mA
ESD12
COM12
ESD
OVER
VOLTAGE
PROTECTION
CURRENT LIMITER ILIM
0.25xILIM
0.75xILIM
1.5mA
I2
I2
IN2
OUT2
OPTO COUPLER DRIVER
Vc
ESD
Volt Prot
BIASING
CIRCUIT
TO COMPARATORS
ESDC
COM
IN3
I3
0.75xILIM
0.25xILIM
CURRENT LIMITER ILIM
OPTO COUPLER DRIVER
OUT3
ESD
OVER
VOLTAGE
PROTECTION
I3
1.5mA
ESD34
COM34
ESD
OVER
VOLTAGE
PROTECTION
CURRENT LIMITER ILIM
0.25xILIM
0.75xILIM
1.5mA
I4
I4
IN4
OUT4
OPTO COUPLER DRIVER