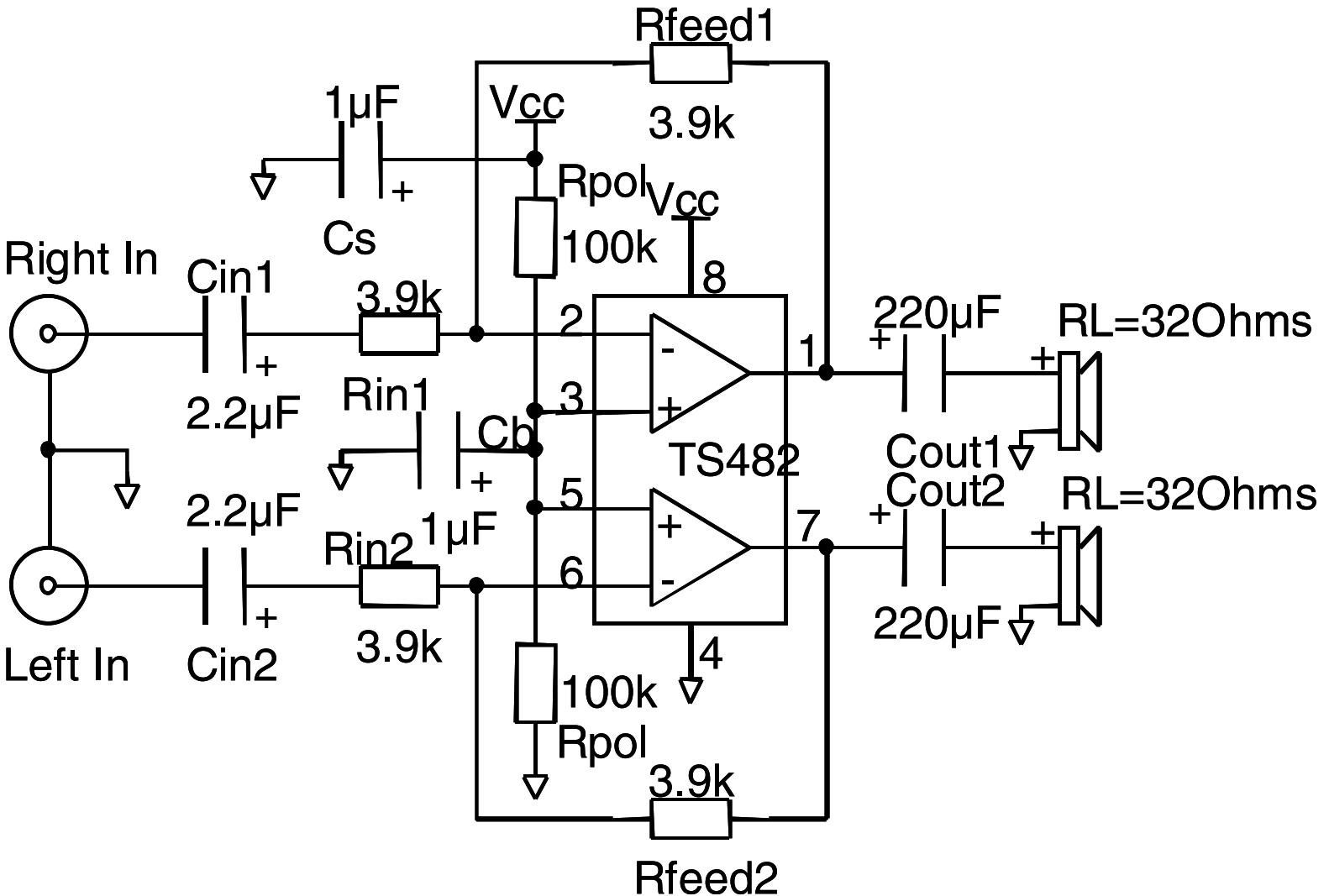
Rfeed1
3.9k
1µF
Vcc
Cs
Rpol
100k
Vcc
8
Right In
Cin1
3.9k
2
1
220µF
RL=32Ohms
2.2µF
Rin1
3
Cb
TS482
Cout1
5
Cout2
RL=32Ohms
2.2µF
1µF
7
Rin2
6
220µF
Left In
Cin2
3.9k
4
100k
Rpol
3.9k
Rfeed2