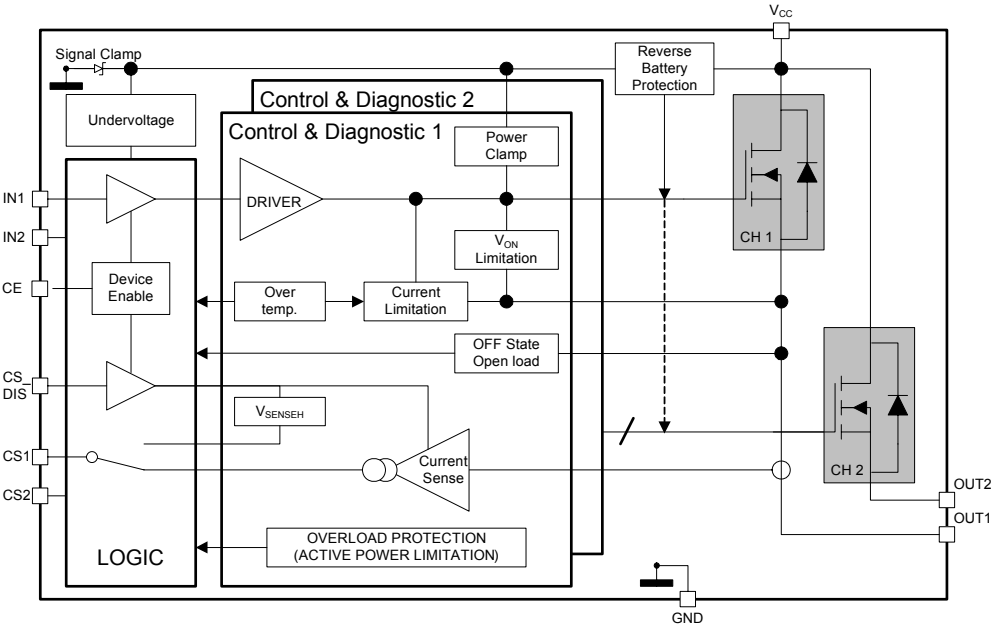
VCC
Signal Clamp
Reverse Battery Protection
Control & Diagnostic 2
Undervoltage
Control & Diagnostic 1
Power Clamp
IN1
IN2
DRIVER
VON Limitation
CH 1
CE
Device Enable
Over temp.
Current Limitation
OFF State Open load
CS DIS
VSENSEH
CS1
CS2
Current Sense
CH 2
OUT2
OUT1
LOGIC
OVERLOAD PROTECTION (ACTIVE POWER LIMITATION)
GND