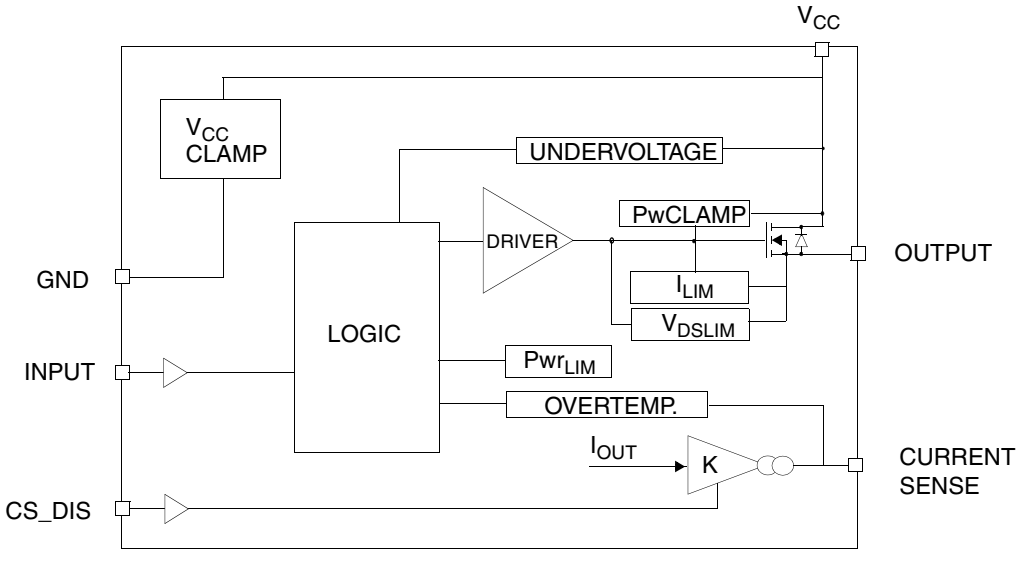
VCC
VCC CLAMP
UNDERVOLTAGE
PwCLAMP
DRIVER
OUTPUT
GND
ILIM
VDSLIM
LOGIC
INPUT
PwrLIM
OVERTEMP.
IOUT
K
CURRENT SENSE
CS_DIS