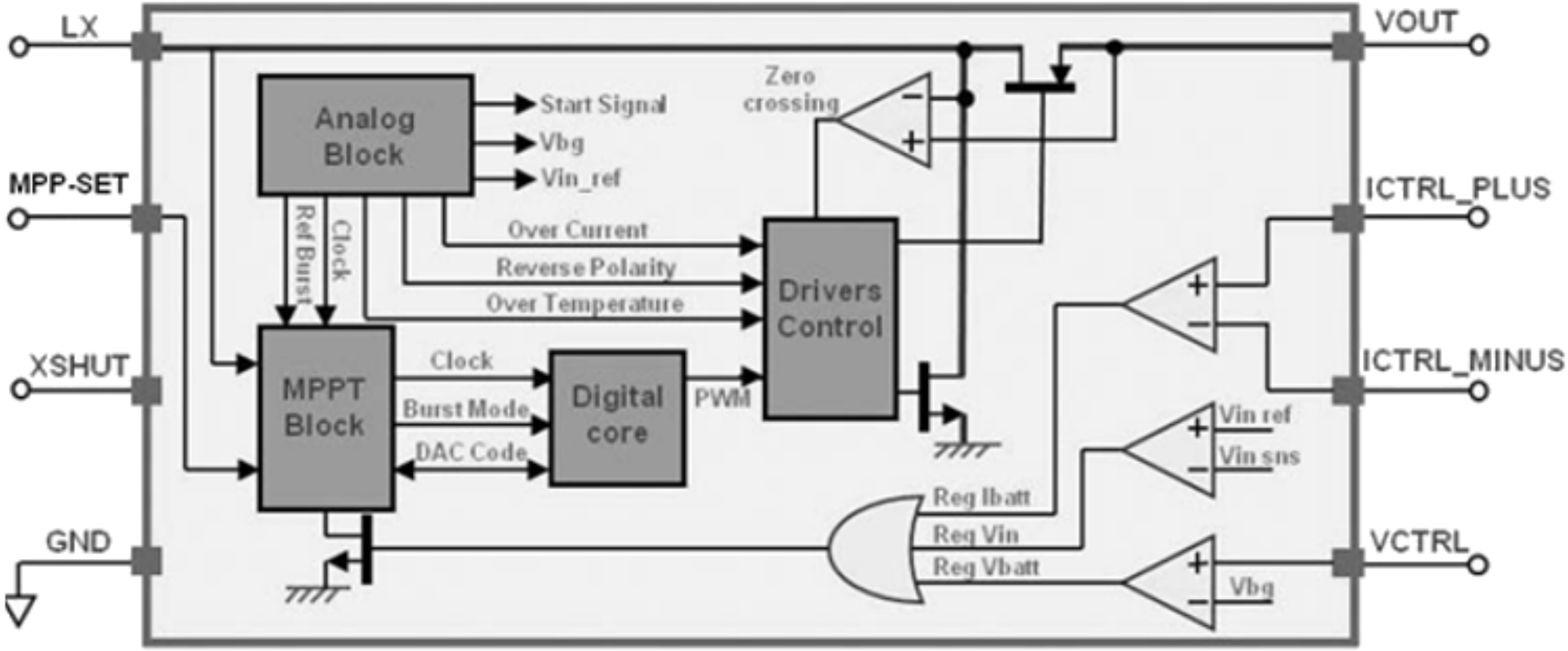
LX
VOUT
MPP-SET
ICTRL_PLUS
XSHUT
ICTRL_MINUS
GND
VCTRL
Analog Block
Start Signal
Vbg
Vin_ref
Zero crossing
Ref Burst
Clock
Over Current
Reverse Polarity
Over Temperature
Drivers Control
MPPT Block
Clock
Burst Mode
DAC Code
Digital core
PWM
Vin ref
Vin sns
Reg Ibatt
Reg Vin
Reg Vbatt
Vbg