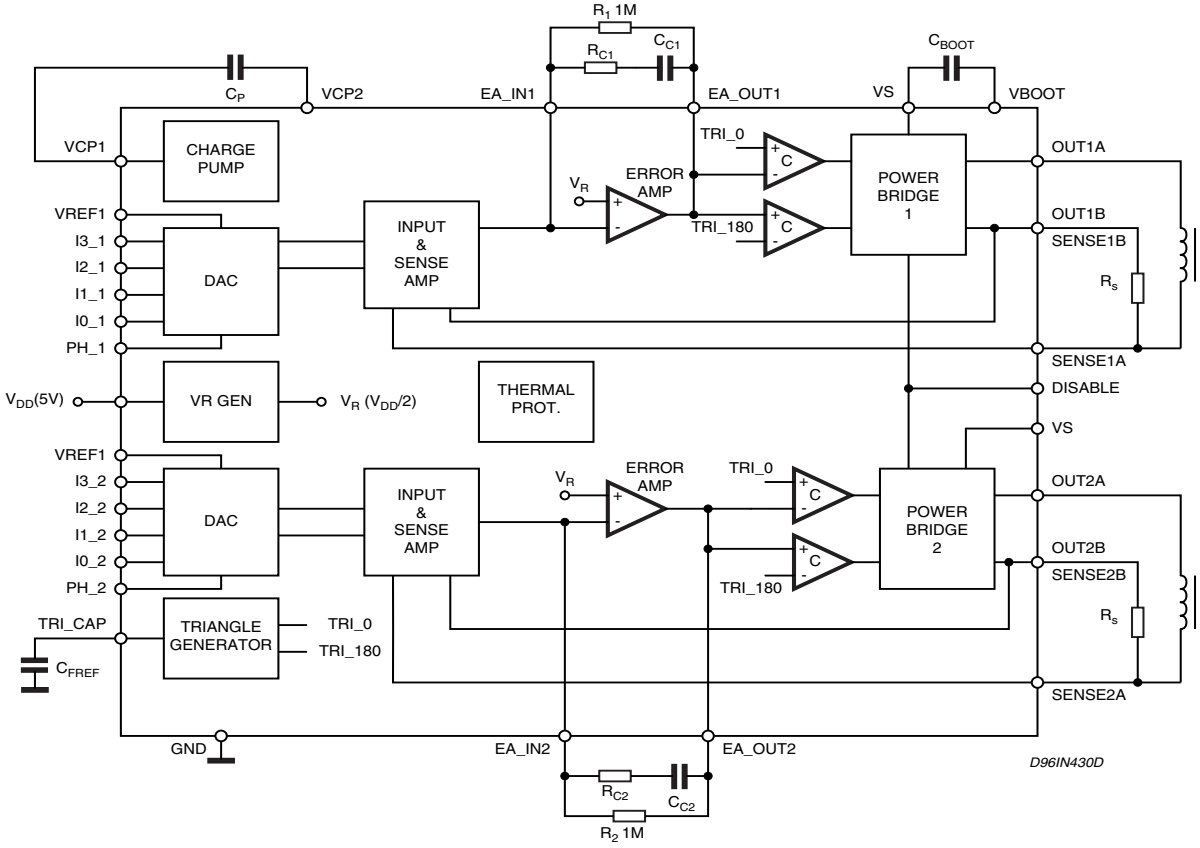
R1 1M
RC1
CC1
CBOOT
CP
VCP2
EA_IN1
EA_OUT1
VS
VBOOT
VCP1
CHARGE PUMP
TRI_0
C
OUT1A
VR
ERROR AMP
POWER BRIDGE 1
VREF1
I3_1
I2_1
I1_1
I0_1
PH_1
DAC
INPUT & SENSE AMP
TRI_180
OUT1B
SENSE1B
Rs
SENSE1A
VDD(5V)
VR GEN
VR (VDD/2)
THERMAL PROT.
DISABLE
VS
VREF1
I3_2
I2_2
I1_2
I0_2
PH_2
DAC
INPUT & SENSE AMP
VR
ERROR AMP
TRI_0
C
OUT2A
POWER BRIDGE 2
OUT2B
SENSE2B
TRI_180
Rs
TRI_CAP
TRIANGLE GENERATOR
TRI_0
TRI_180
CFREF
SENSE2A
GND
EA_IN2
EA_OUT2
D96IN430D
RC2
CC2
R2 1M