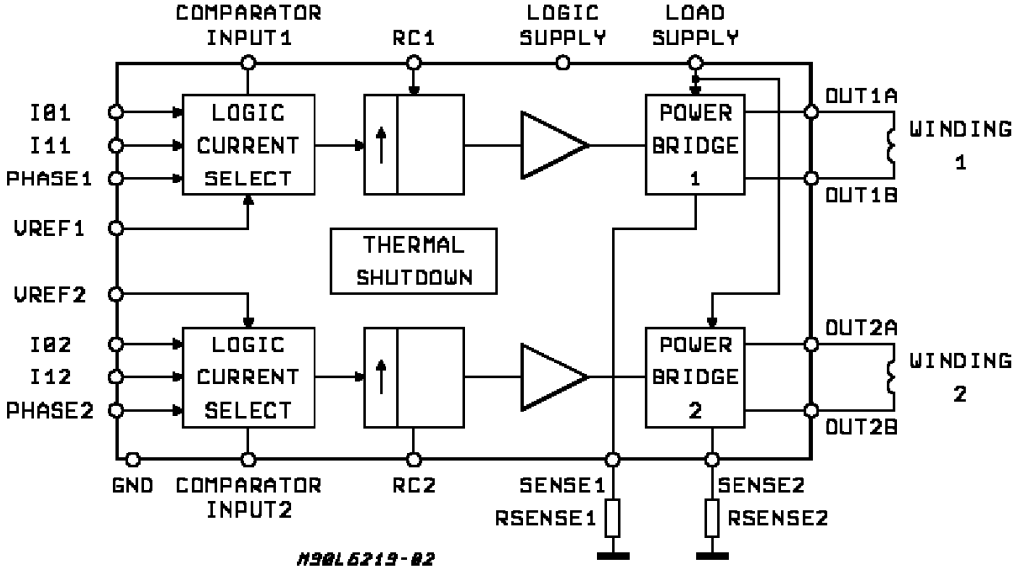
COMPARATOR INPUT1
RC1
LOGIC SUPPLY
LOAD SUPPLY
I01
I11
PHASE1
VREF1
VREF2
I02
I12
PHASE2
LOGIC CURRENT SELECT
LOGIC CURRENT SELECT
THERMAL SHUTDOWN
POWER BRIDGE 1
POWER BRIDGE 2
OUT1A
OUT1B
OUT2A
OUT2B
WINDING 1
WINDING 2
GND
COMPARATOR INPUT2
RC2
SENSE1
SENSE2
RSENSE1
RSENSE2
M90L6219-02