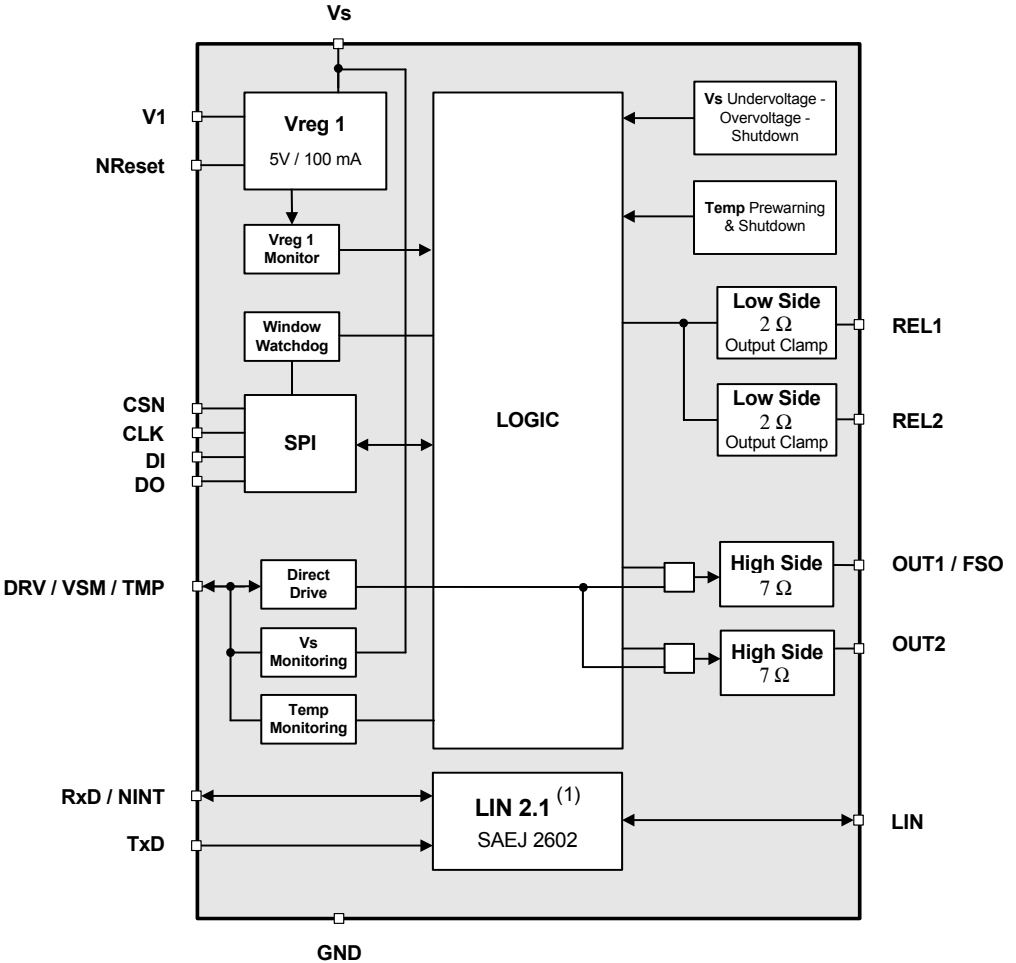
Vs
V1
NReset
Vreg 1
5V / 100 mA
Vreg 1 Monitor
Window Watchdog
CSN
CLK
DI
DO
SPI
DRV / VSM / TMP
Direct Drive
Vs Monitoring
Temp Monitoring
RxD / NINT
TxD
LIN 2.1 (1)
SAEJ 2602
LOGIC
Vs Undervoltage - Overvoltage - Shutdown
Temp Prewarning & Shutdown
Low Side
2 Ω
Output Clamp
REL1
Low Side
2 Ω
Output Clamp
REL2
High Side
7 Ω
OUT1 / FSO
High Side
7 Ω
OUT2
LIN
GND