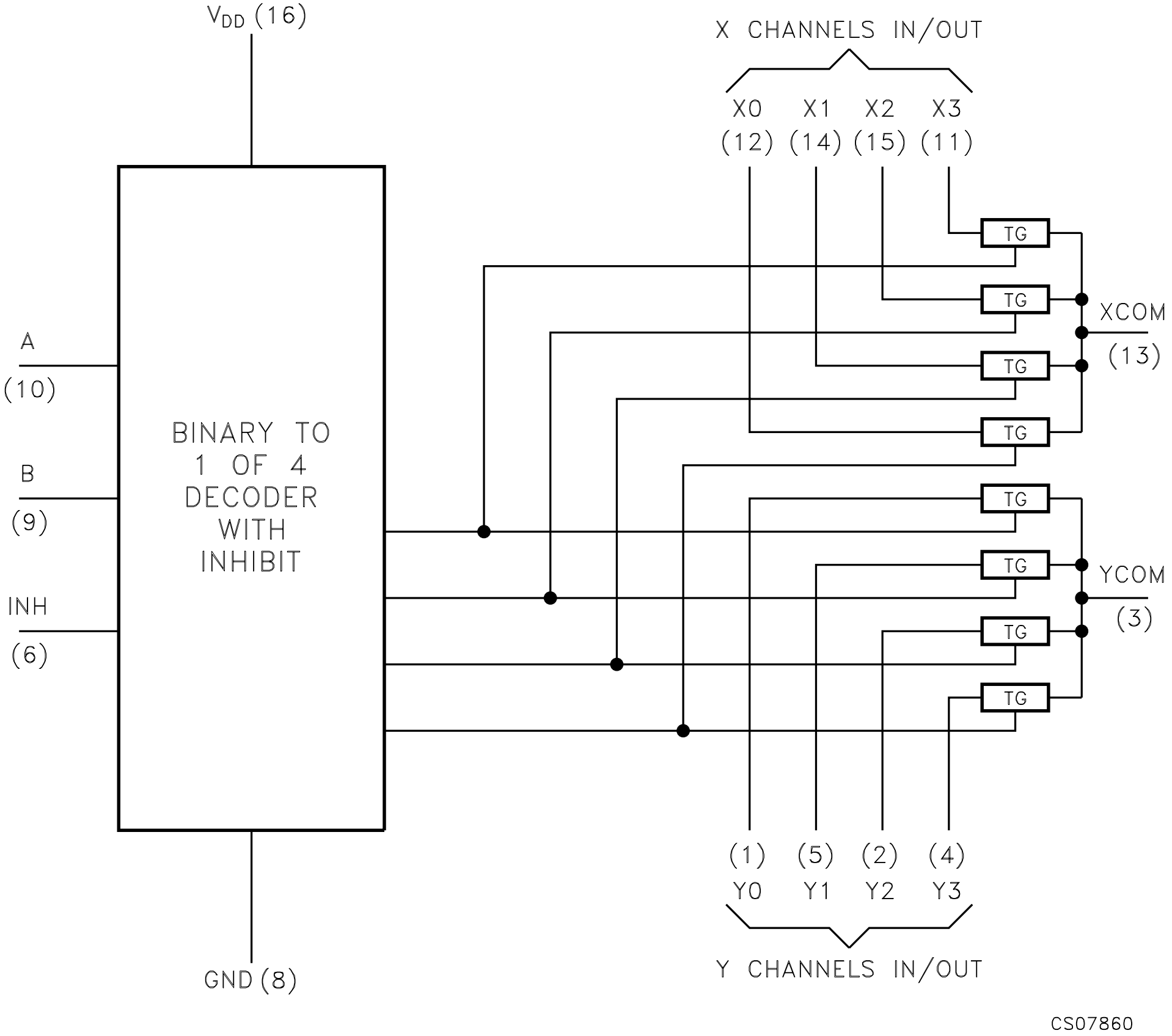
VDD (16)
X CHANNELS IN/OUT
X0 (12)
X1 (14)
X2 (15)
X3 (11)
TG
XCOM
(13)
A
(10)
B
(9)
INH
(6)
BINARY TO
1 OF 4
DECODER
WITH
INHIBIT
YCOM
(3)
(1) Y0
(5) Y1
(2) Y2
(4) Y3
Y CHANNELS IN/OUT
GND (8)
CS07860