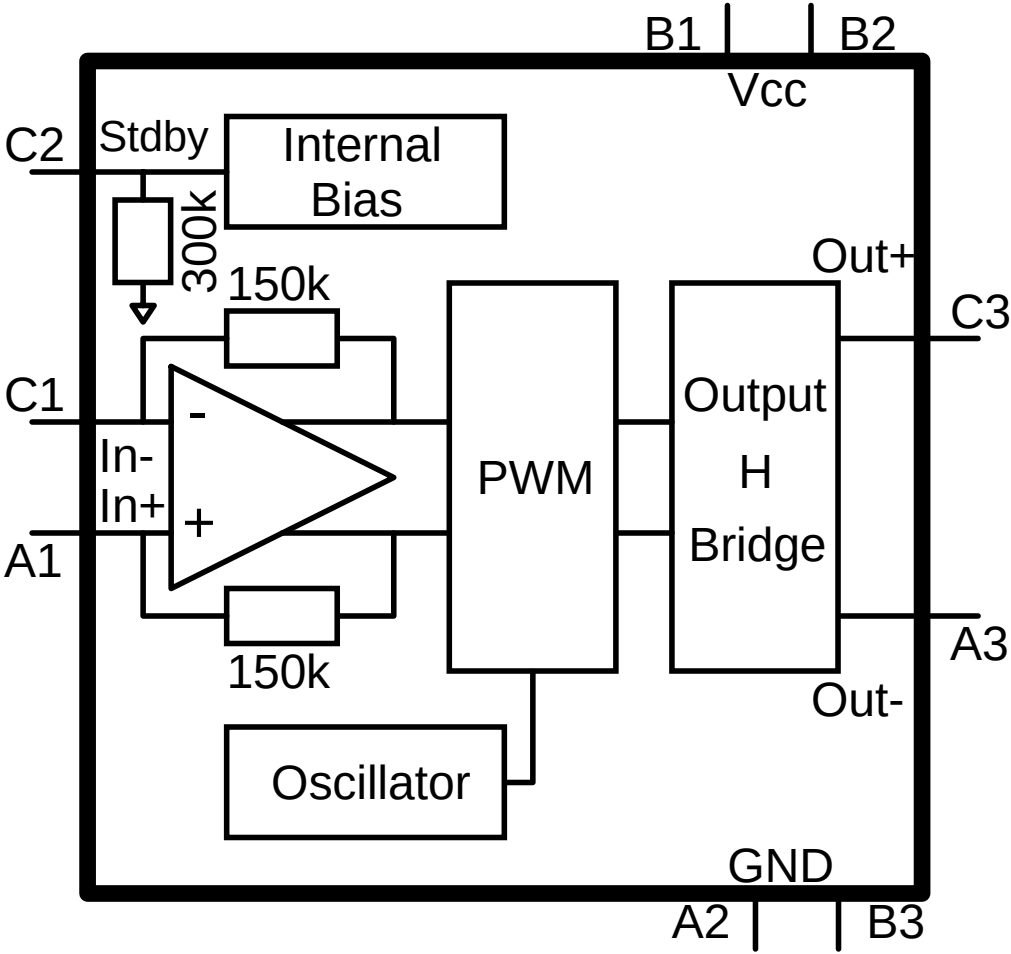
B1
B2
Vcc
C2
Stdby
Internal
Bias
300k
150k
Out+
C3
C1
-
In-
In+
+
A1
PWM
Output
H
Bridge
150k
A3
Out-
Oscillator
GND
A2
B3