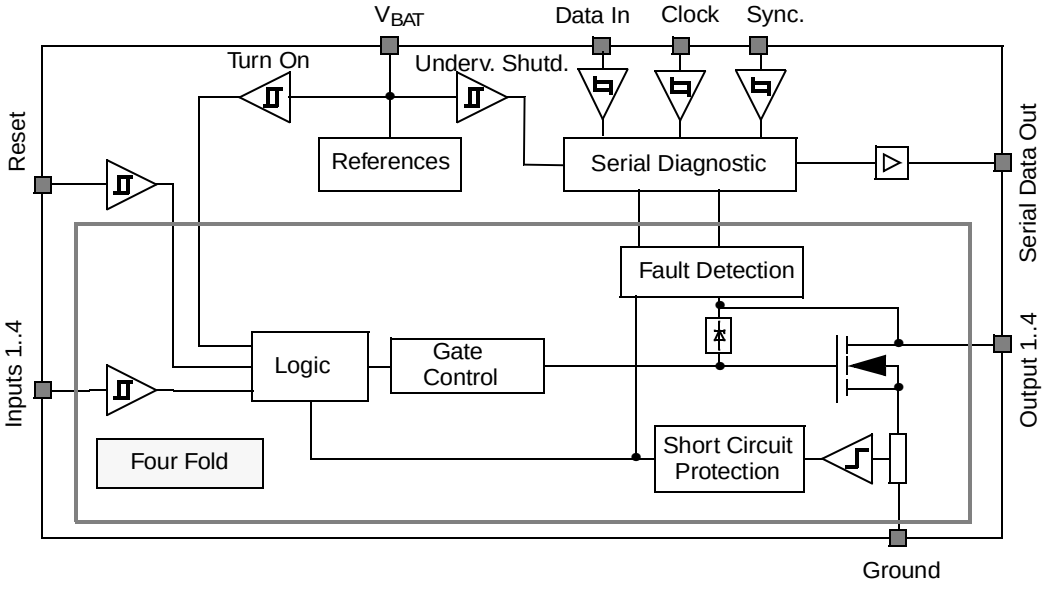
V_{BAT}
Data In
Clock
Sync.
Turn On
Underv. Shutd.
Reset
References
Serial Diagnostic
Serial Data Out
Fault Detection
Inputs 1..4
Logic
Gate Control
Output 1..4
Four Fold
Short Circuit Protection
Ground