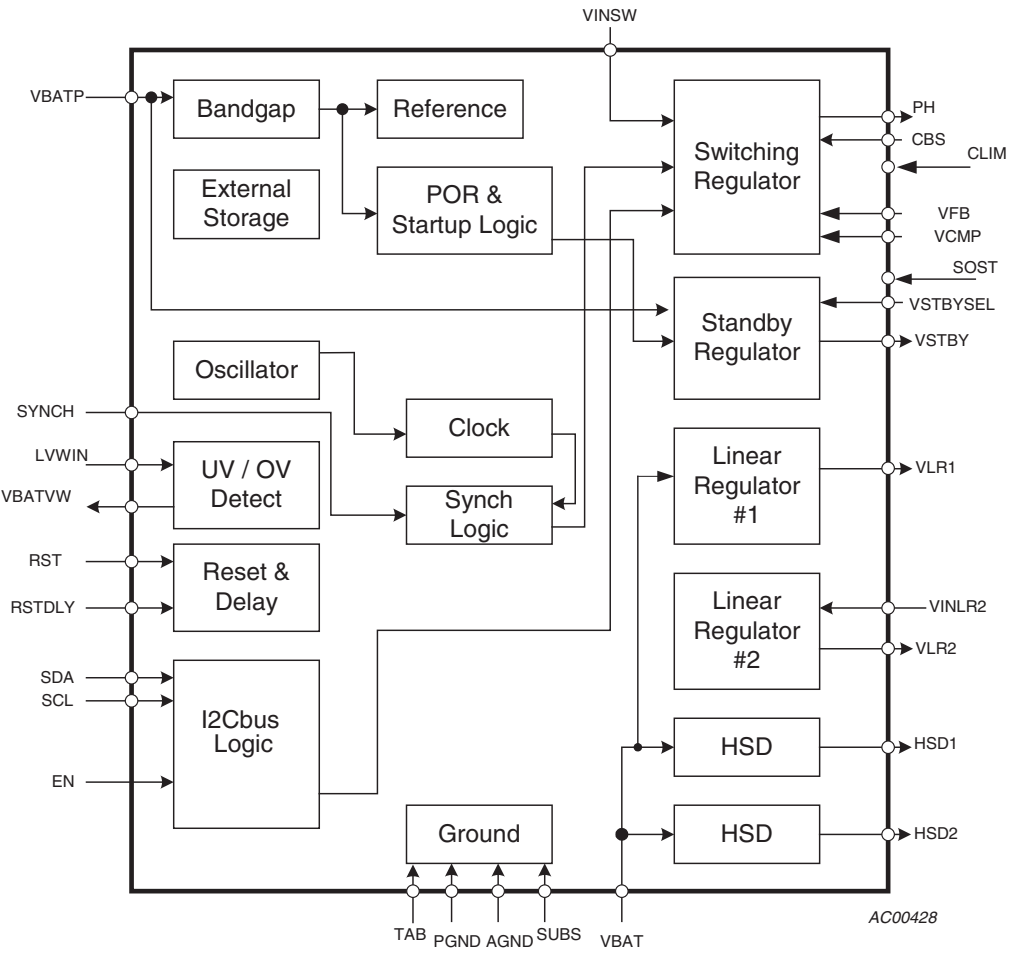
VINSW
VBATP
Bandgap
Reference
External Storage
POR & Startup Logic
Switching Regulator
PH
CBS
CLIM
VFB
VCMP
SOST
VSTBYSEL
Standby Regulator
VSTBY
Oscillator
SYNCH
Clock
LVWIN
UV / OV Detect
VBATVW
Synch Logic
Linear Regulator #1
VLR1
RST
Reset & Delay
RSTDLY
Linear Regulator #2
VINLR2
VLR2
SDA
SCL
I2Cbus Logic
HSD
HSD1
EN
Ground
HSD
HSD2
TAB
PGND
AGND
SUBS
VBAT
AC00428