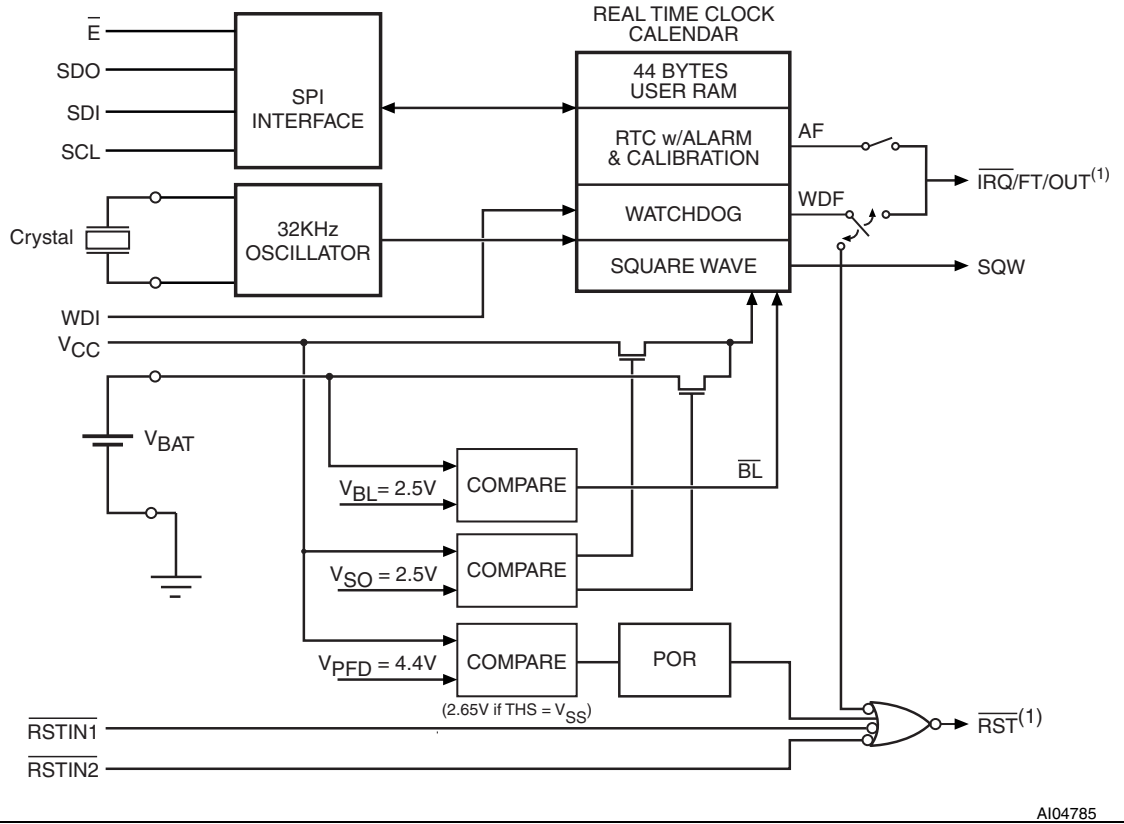
REAL TIME CLOCK
CALENDAR
E
SDO
SDI
SCL
SPI
INTERFACE
44 BYTES
USER RAM
RTC w/ALARM
& CALIBRATION
WATCHDOG
SQUARE WAVE
AF
WDF
IRQ/FT/OUT(1)
SQW
Crystal
32KHz
OSCILLATOR
WDI
VCC
VBAT
VBL= 2.5V
COMPARE
BL
VSO = 2.5V
COMPARE
VPFD = 4.4V
COMPARE
POR
(2.65V if THS = VSS)
RSTIN1
RSTIN2
RST(1)
AI04785