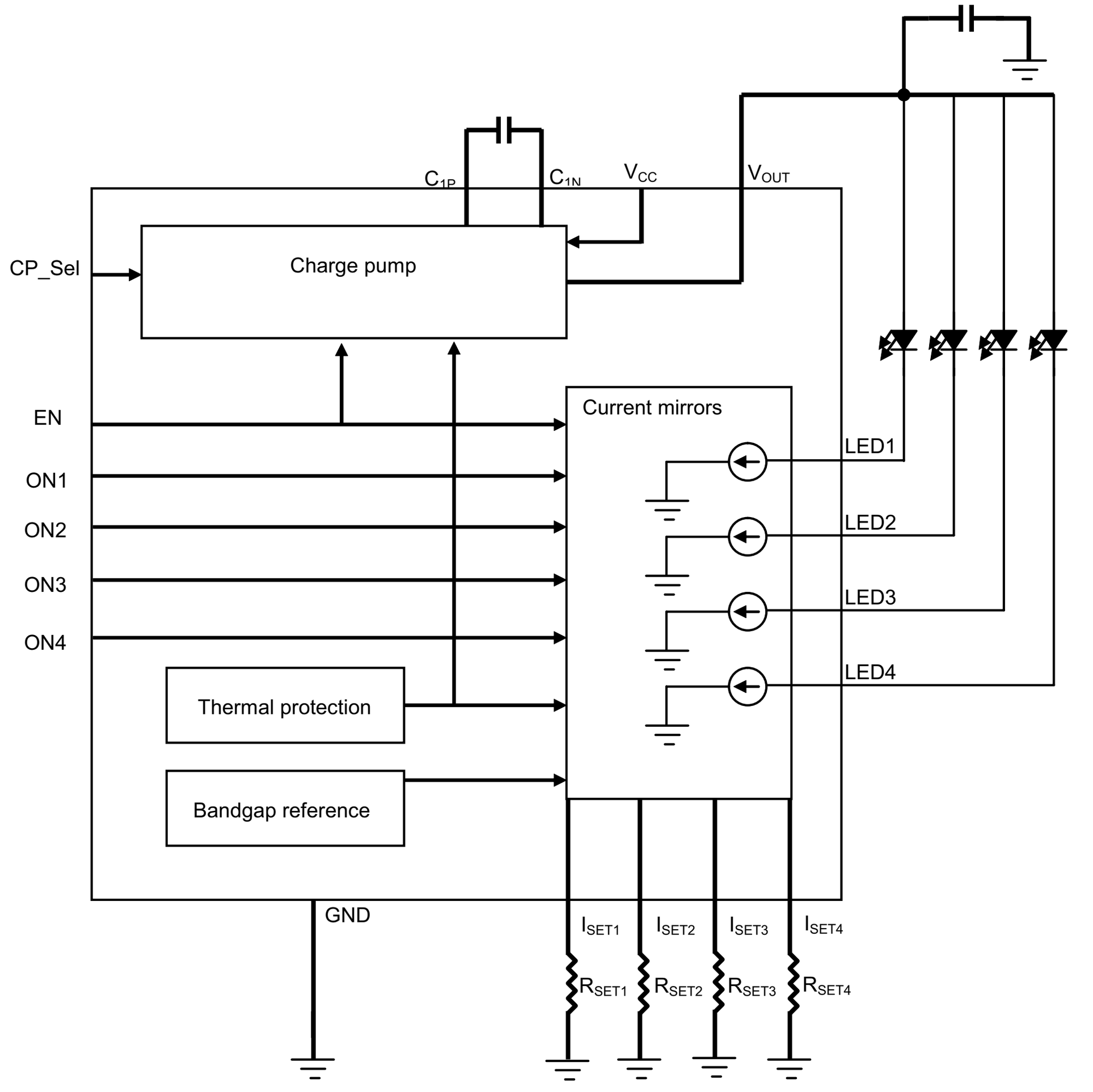
C1P
C1N
VCC
VOUT
CP_Sel
Charge pump
EN
ON1
ON2
ON3
ON4
Current mirrors
LED1
LED2
LED3
LED4
Thermal protection
Bandgap reference
GND
ISET1
ISET2
ISET3
ISET4
RSET1
RSET2
RSET3
RSET4