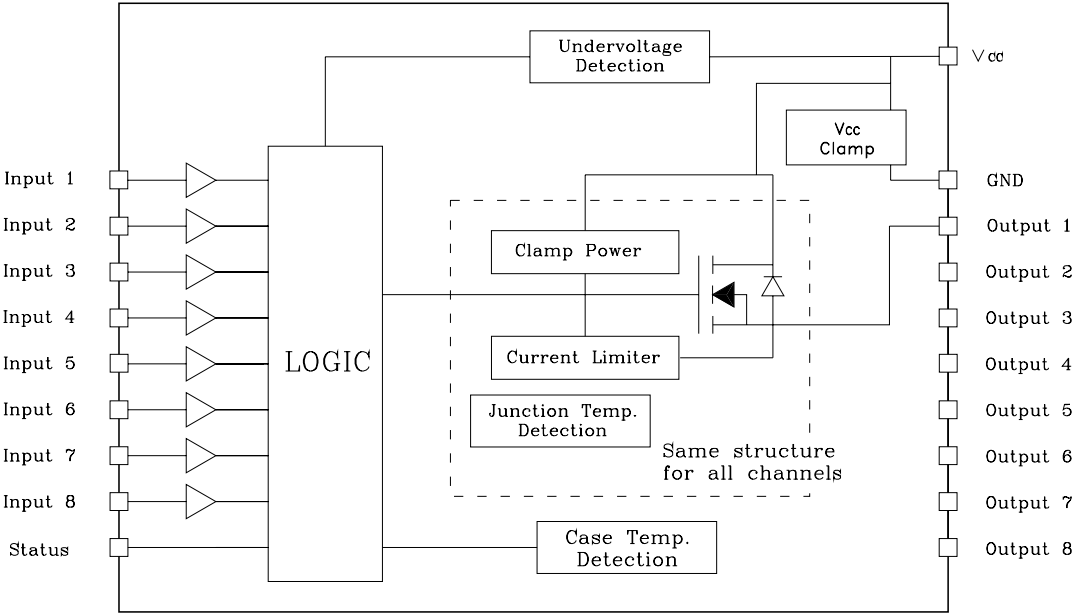
Undervoltage Detection
Vcc
Vcc Clamp
GND
Input 1
Input 2
Input 3
Input 4
Input 5
Input 6
Input 7
Input 8
Status
LOGIC
Clamp Power
Current Limiter
Junction Temp. Detection
Same structure for all channels
Case Temp. Detection
Output 1
Output 2
Output 3
Output 4
Output 5
Output 6
Output 7
Output 8