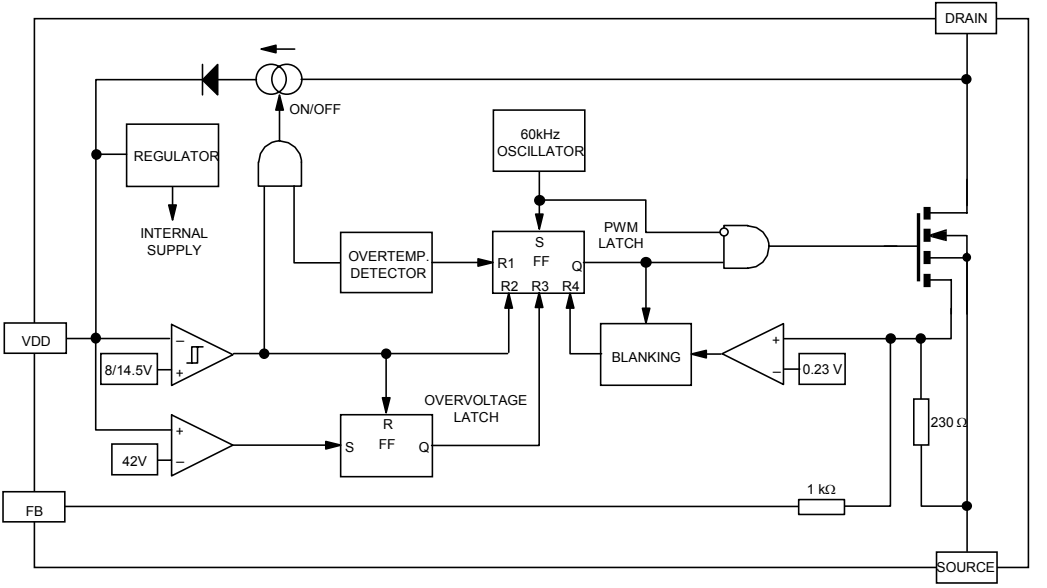
DRAIN
ON/OFF
REGULATOR
INTERNAL
SUPPLY
60kHz
OSCILLATOR
OVERTEMP.
DETECTOR
S
FF
R1
Q
R2
R3
R4
PWM
LATCH
VDD
8/14.5V
BLANKING
0.23 V
OVERVOLTAGE
LATCH
R
FF
S
Q
42V
230 Ω
1 kΩ
FB
SOURCE