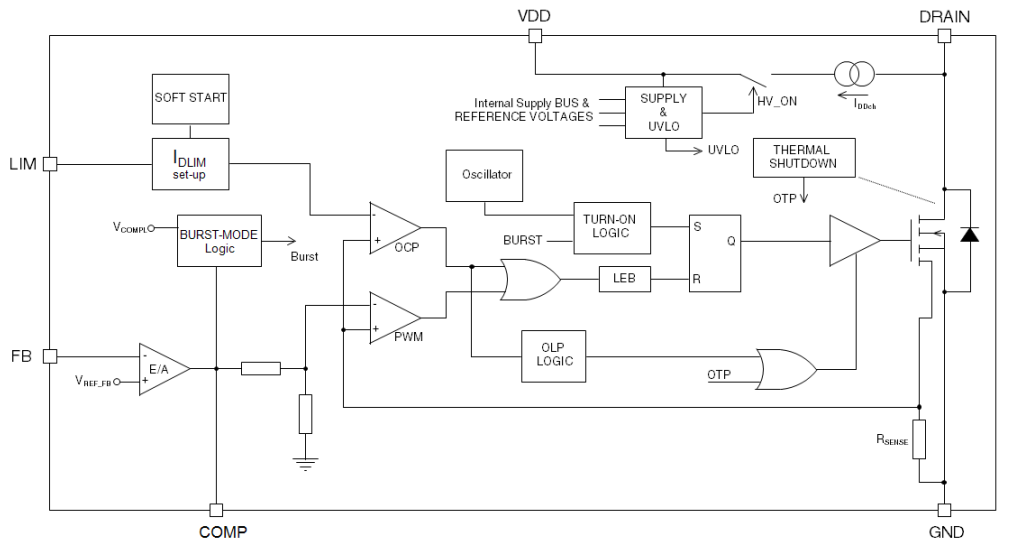
VDD
DRAIN
SOFT START
Internal Supply BUS &
REFERENCE VOLTAGES
SUPPLY
&
UVLO
HV_ON
I_{DDch}
UVLO
THERMAL
SHUTDOWN
OTP
LIM
I_{DLIM}
set-up
Oscillator
V_{COMPL}
BURST-MODE
Logic
Burst
OCP
BURST
TURN-ON
LOGIC
S
Q
R
LEB
PWM
FB
E/A
V_{REF_FB}
OLP
LOGIC
OTP
R_{SENSE}
COMP
GND