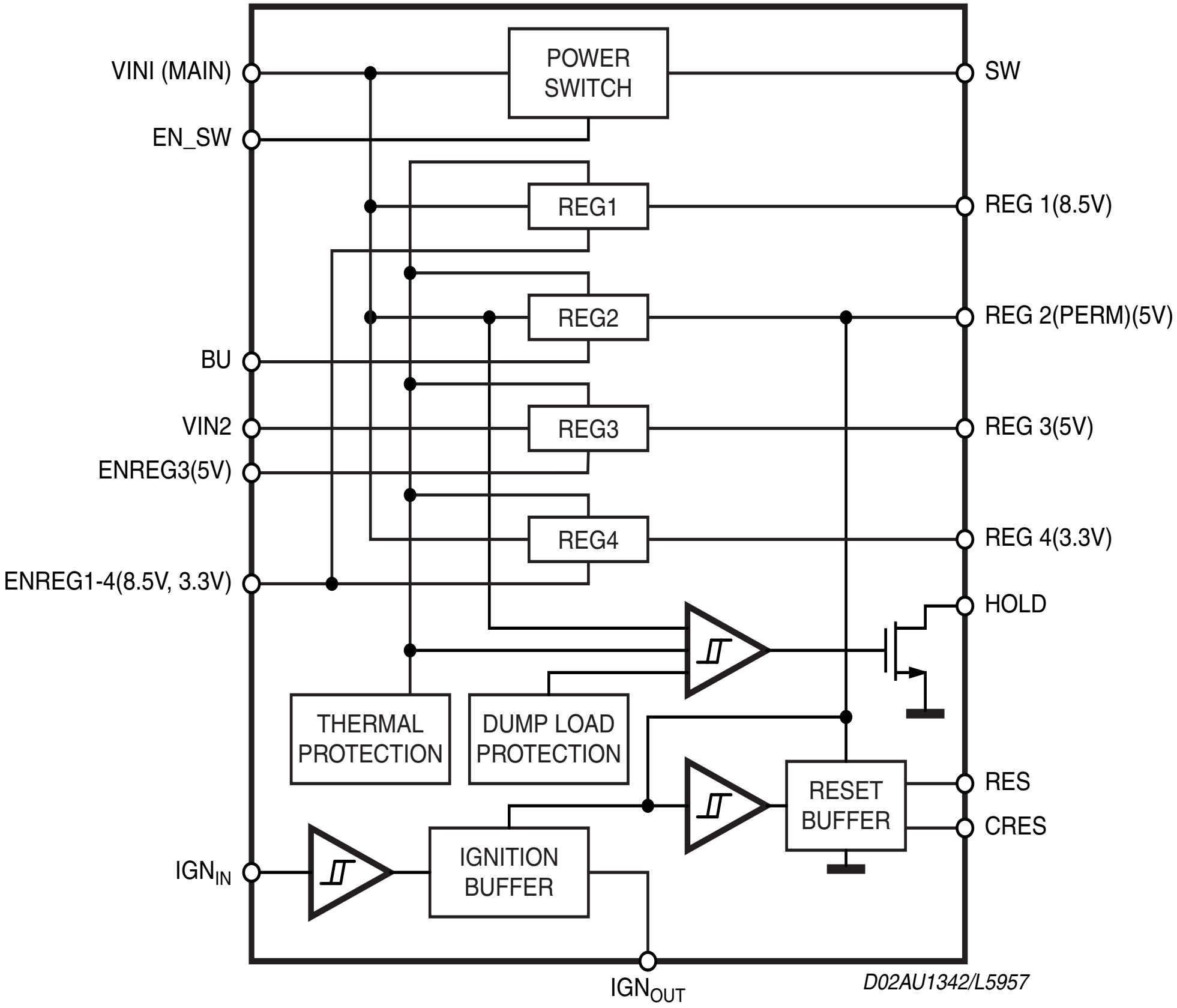
VINI (MAIN)
EN_SW
BU
VIN2
ENREG3(5V)
ENREG1-4(8.5V, 3.3V)
IGN_IN
IGN_OUT
POWER SWITCH
REG1
REG2
REG3
REG4
THERMAL PROTECTION
DUMP LOAD PROTECTION
IGNITION BUFFER
RESET BUFFER
SW
REG 1(8.5V)
REG 2(PERM)(5V)
REG 3(5V)
REG 4(3.3V)
HOLD
RES
CRES
D02AU1342/L5957