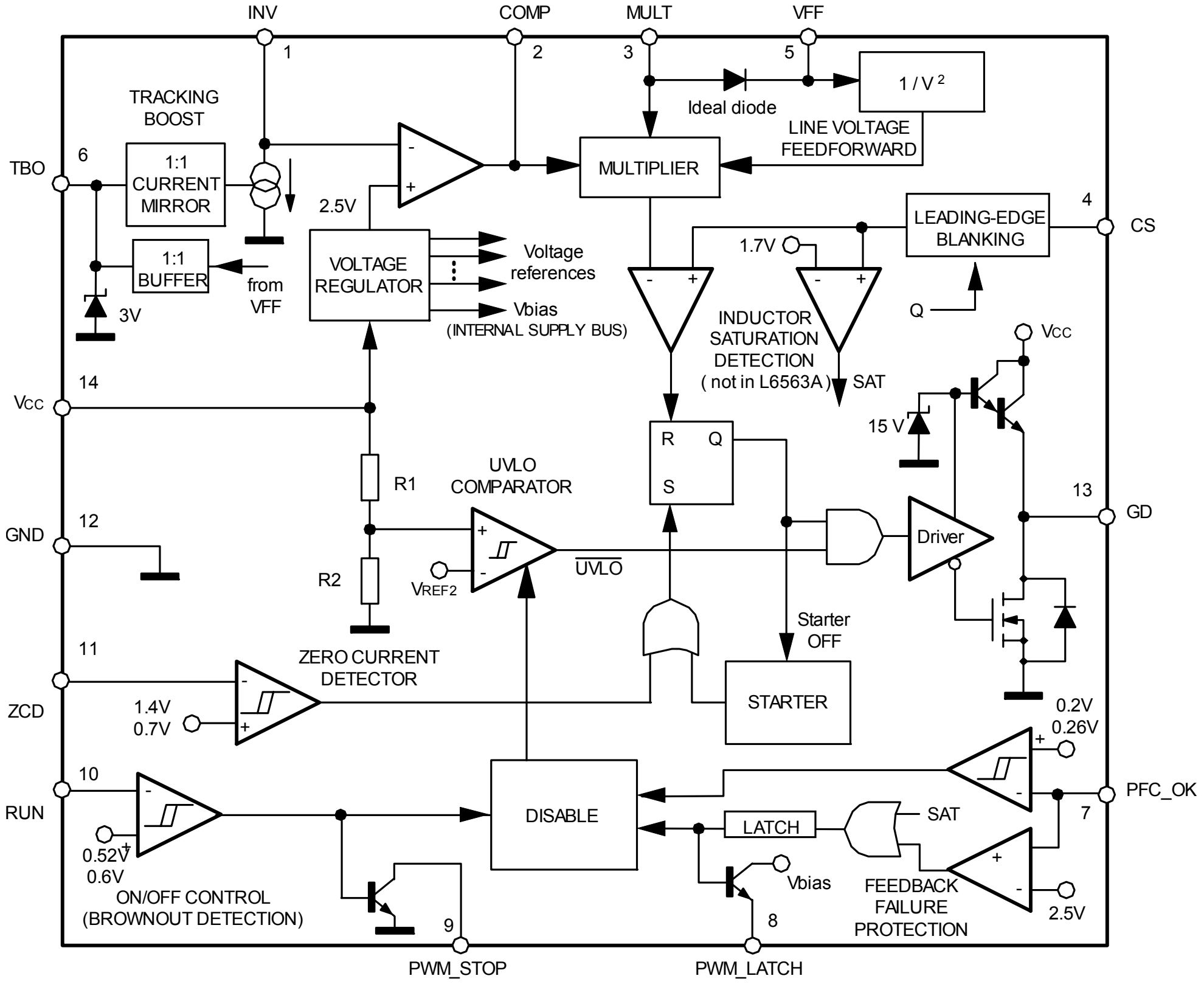
INV
COMP
MULT
VFF
1
2
3
5
1 / V 2
Ideal diode
LINE VOLTAGE
FEEDFORWARD
TRACKING
BOOST
TBO
6
1:1
CURRENT
MIRROR
MULTIPLIER
2.5V
LEADING-EDGE
BLANKING
4
CS
1:1
BUFFER
from
VFF
VOLTAGE
REGULATOR
Voltage
references
Vbias
(INTERNAL SUPPLY BUS)
1.7V
3V
INDUCTOR
SATURATION
DETECTION
(not in L6563A)
SAT
Q
Vcc
14
Vcc
15 V
R
Q
S
R1
UVLO
COMPARATOR
13
GND
12
GND
Driver
R2
VREF2
UVLO
Starter
OFF
11
ZERO CURRENT
DETECTOR
ZCD
1.4V
0.7V
STARTER
0.2V
0.26V
10
RUN
DISABLE
LATCH
SAT
PFC_OK
7
0.52V
0.6V
ON/OFF CONTROL
(BROWNOUT DETECTION)
Vbias
FEEDBACK
FAILURE
PROTECTION
2.5V
9
8
PWM_STOP
PWM_LATCH