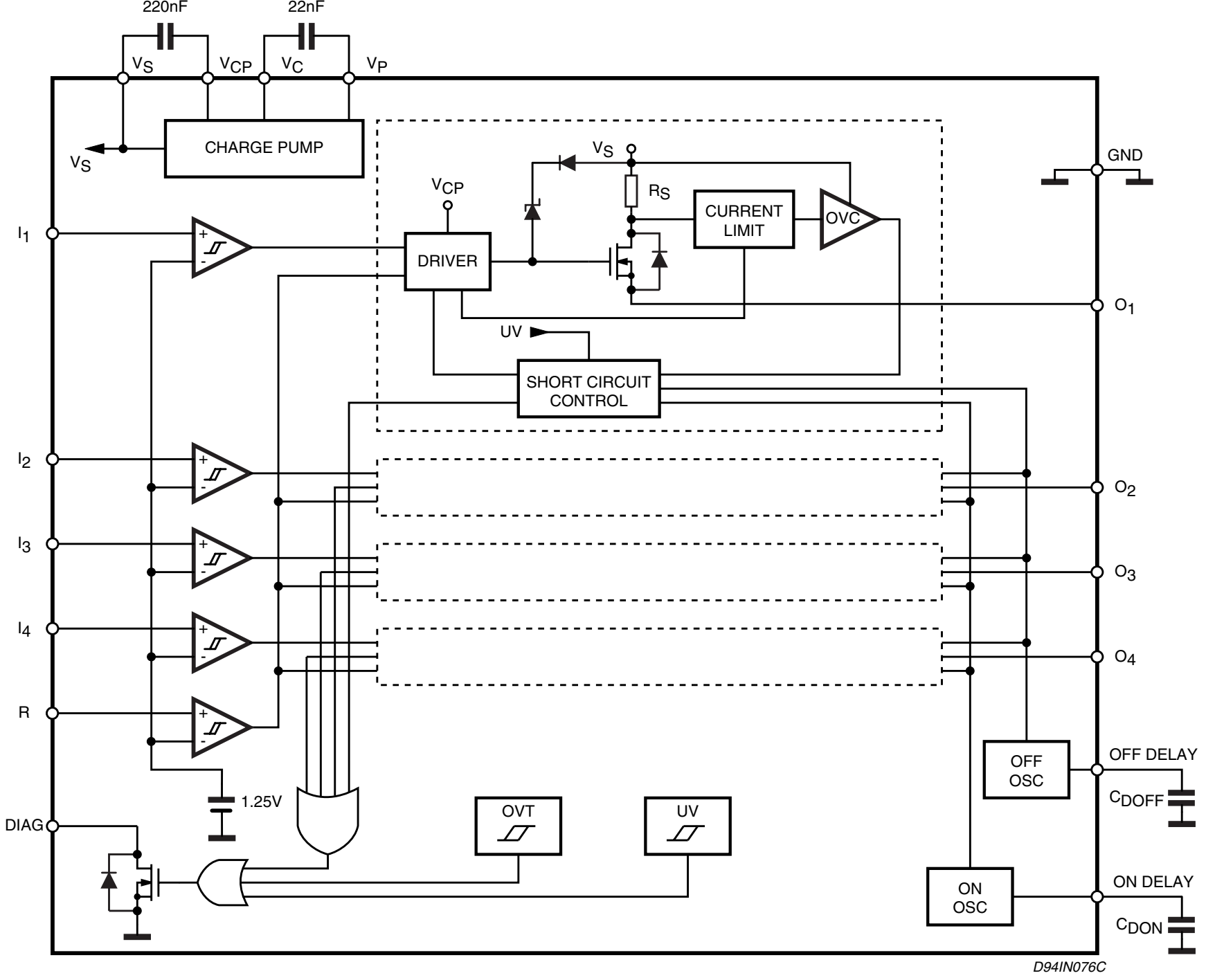
220nF
22nF
VS
VCP
VC
VP
CHARGE PUMP
VS
VCP
VS
RS
CURRENT LIMIT
OVC
GND
I1
DRIVER
O1
UV
SHORT CIRCUIT CONTROL
I2
O2
I3
O3
I4
O4
R
OFF OSC
OFF DELAY
CDOFF
1.25V
DIAG
OVT
UV
ON OSC
ON DELAY
CDON
D94IN076C