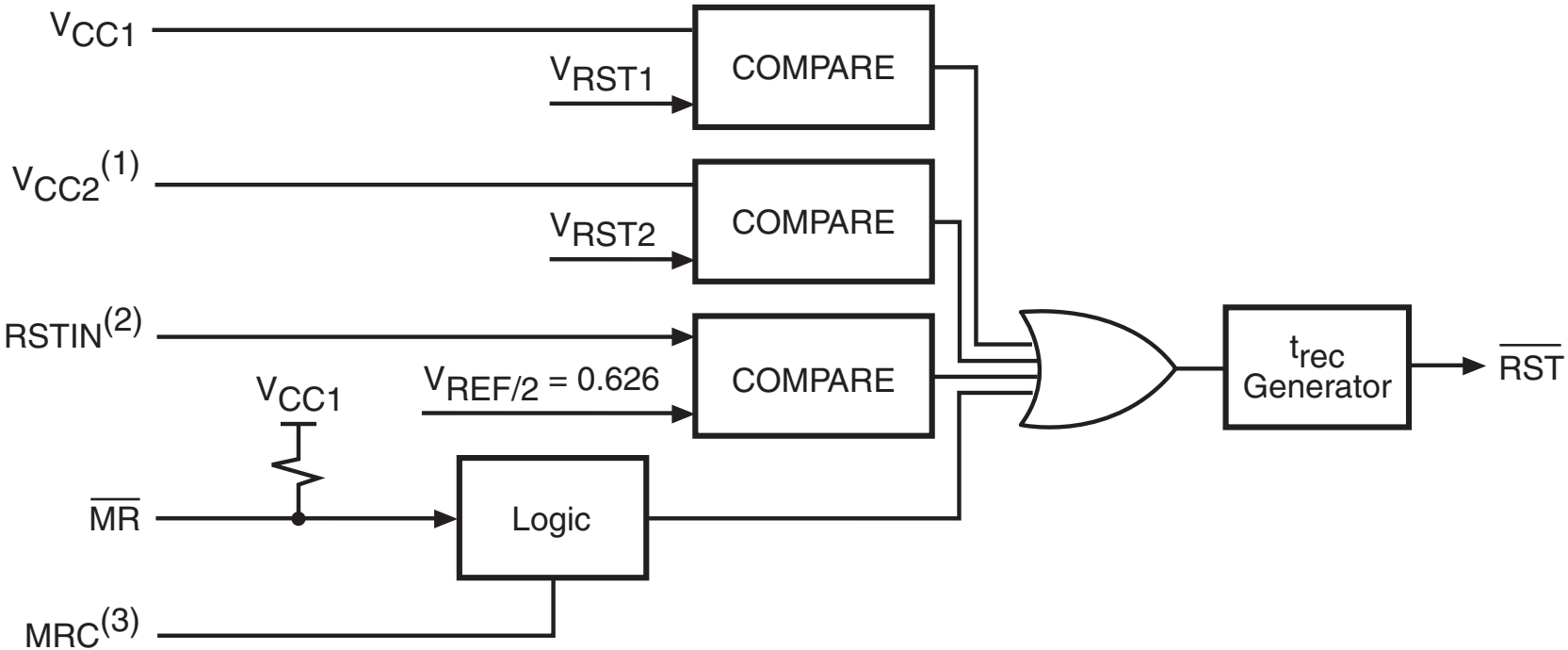
VCC1
VRST1
COMPARE
VCC2(1)
VRST2
COMPARE
RSTIN(2)
VCC1
VREF/2 = 0.626
COMPARE
MR
Logic
MRC(3)
trec
Generator
RST

AI10421