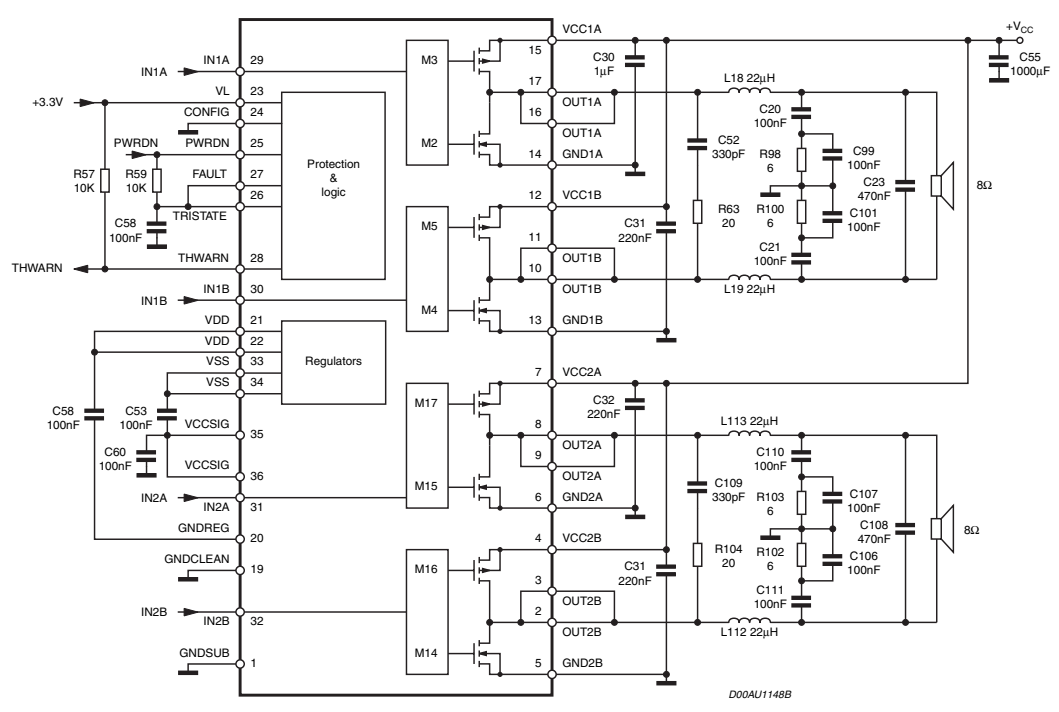
IN1A
IN1A
29
VL
23
+3.3V
CONFIG
24
PWRDN
PWRDN
25
R57
10K
R59
10K
FAULT
27
26
TRISTATE
C58
100nF
THWARN
THWARN
28
IN1B
IN1B
30
VDD
21
VDD
22
VSS
33
VSS
34
C58
100nF
C53
100nF
VCCSIG
35
C60
100nF
VCCSIG
36
IN2A
IN2A
31
GNDREG
20
GNDCLEAN
19
IN2B
IN2B
32
GNDSUB
1
Protection
&
logic
Regulators
M3
M2
M5
M4
M17
M15
M16
M14
15
17
16
14
12
11
10
13
7
8
9
6
4
3
2
5
VCC1A
OUT1A
OUT1A
GND1A
VCC1B
OUT1B
OUT1B
GND1B
VCC2A
OUT2A
OUT2A
GND2A
VCC2B
OUT2B
OUT2B
GND2B
C30
1µF
C31
220nF
C32
220nF
C31
220nF
L18 22µH
L19 22µH
L113 22µH
L112 22µH
C52
330pF
R63
20
C109
330pF
R104
20
C20
100nF
R98
6
R100
6
C21
100nF
C99
100nF
C23
470nF
C101
100nF
C110
100nF
R103
6
R102
6
C111
100nF
C107
100nF
C108
470nF
C106
100nF
8Ω
8Ω
+VCC
C55
1000µF
D00AU1148B