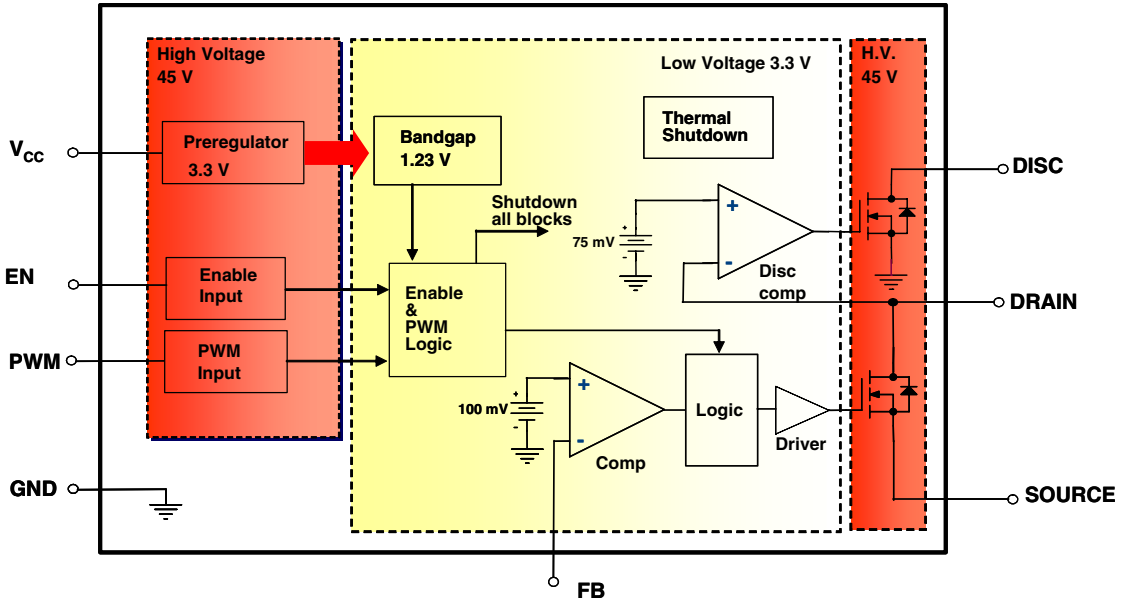
High Voltage
45 V
Low Voltage 3.3 V
H.V.
45 V
Vcc
Preregulator
3.3 V
Bandgap
1.23 V
Thermal
Shutdown
DISC
Shutdown
all blocks
75 mV
Disc
comp
EN
Enable
Input
Enable
&
PWM
Logic
DRAIN
PWM
PWM
Input
100 mV
Comp
Logic
Driver
GND
SOURCE
FB