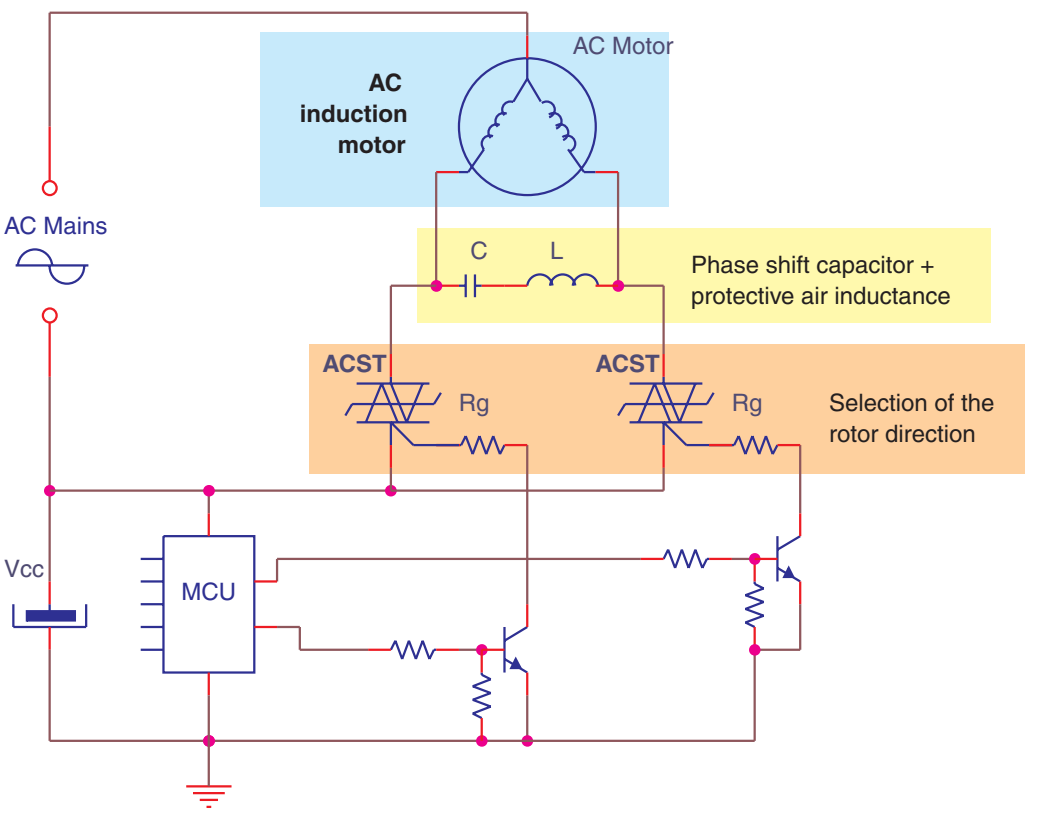
AC Motor
AC
induction
motor
AC Mains
C
L
Phase shift capacitor +
protective air inductance
ACST
Rg
ACST
Rg
Selection of the
rotor direction
Vcc
MCU