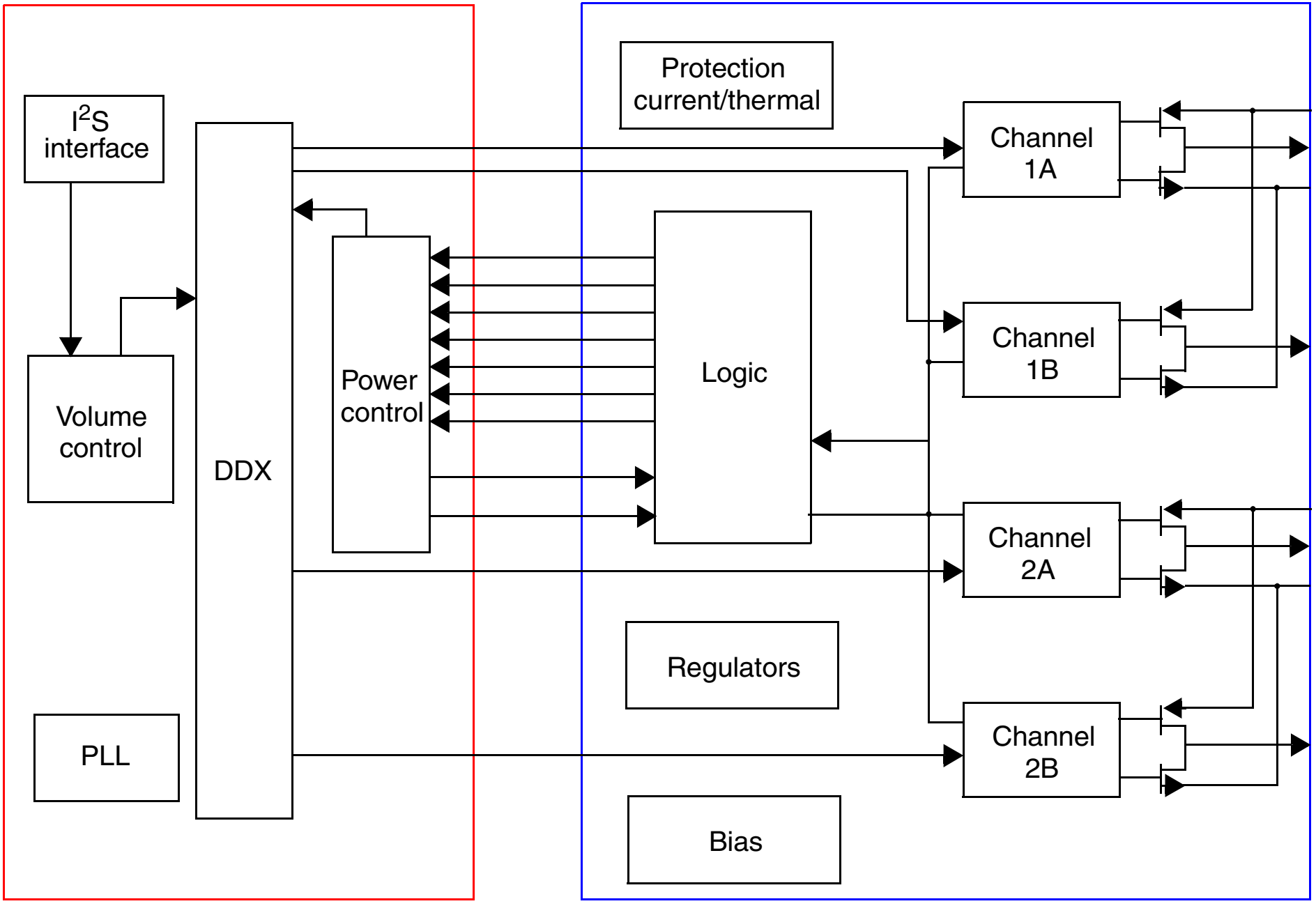
I2S interface
Volume control
PLL
DDX
Power control
Logic
Protection current/thermal
Regulators
Bias
Channel 1A
Channel 1B
Channel 2A
Channel 2B