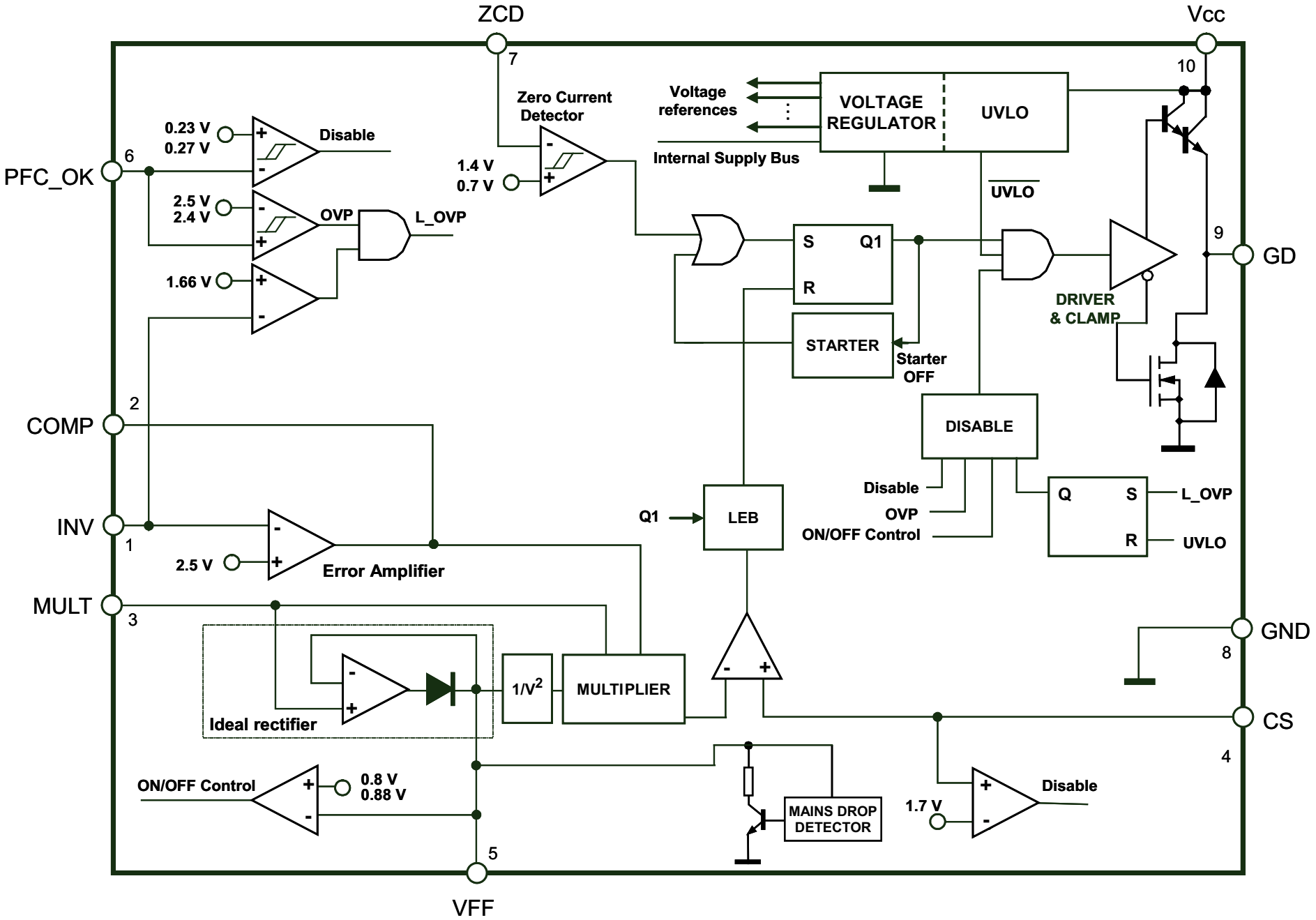
ZCD
Vcc
7
10
Zero Current Detector
Voltage references
VOLTAGE REGULATOR
UVLO
Internal Supply Bus
0.23 V
0.27 V
Disable
PFC_OK
6
1.4 V
0.7 V
2.5 V
2.4 V
OVP
L_OVP
UVLO
S
Q1
R
9
GD
1.66 V
DRIVER & CLAMP
STARTER
Starter OFF
2
COMP
DISABLE
Disable
OVP
ON/OFF Control
Q
S
L_OVP
R
UVLO
INV
1
Q1
LEB
2.5 V
Error Amplifier
MULT
3
GND
8
1/V2
MULTIPLIER
Ideal rectifier
CS
4
ON/OFF Control
0.8 V
0.88 V
MAINS DROP DETECTOR
1.7 V
Disable
5
VFF