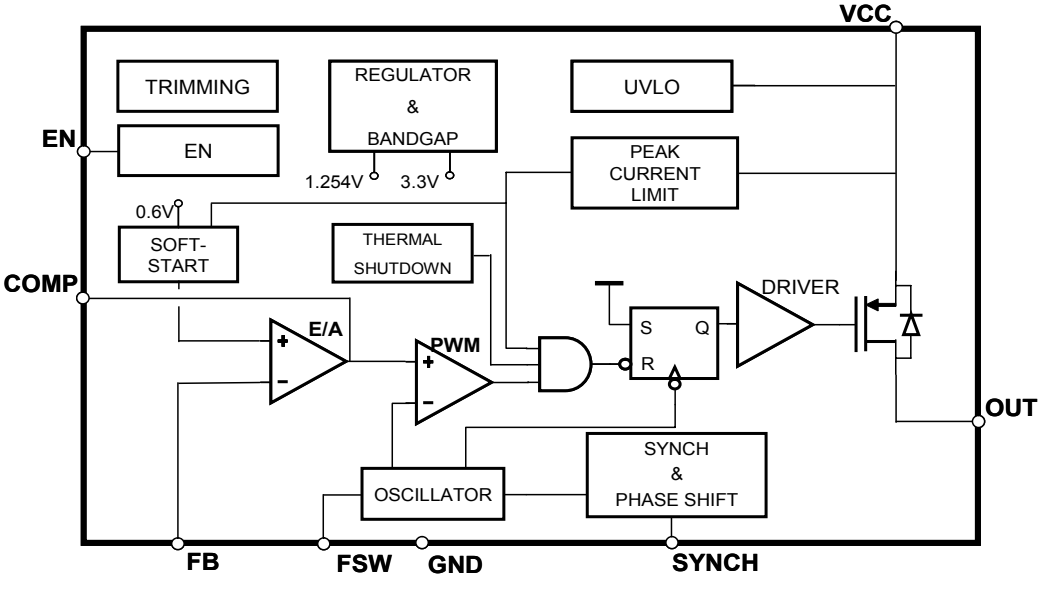
VCC
TRIMMING
REGULATOR
&
BANDGAP
UVLO
EN
EN
PEAK
CURRENT
LIMIT
1.254V
3.3V
0.6V
SOFT-
START
THERMAL
SHUTDOWN
COMP
DRIVER
E/A
PWM
S
Q
R
OUT
SYNCH
&
PHASE SHIFT
OSCILLATOR
FB
FSW
GND
SYNCH