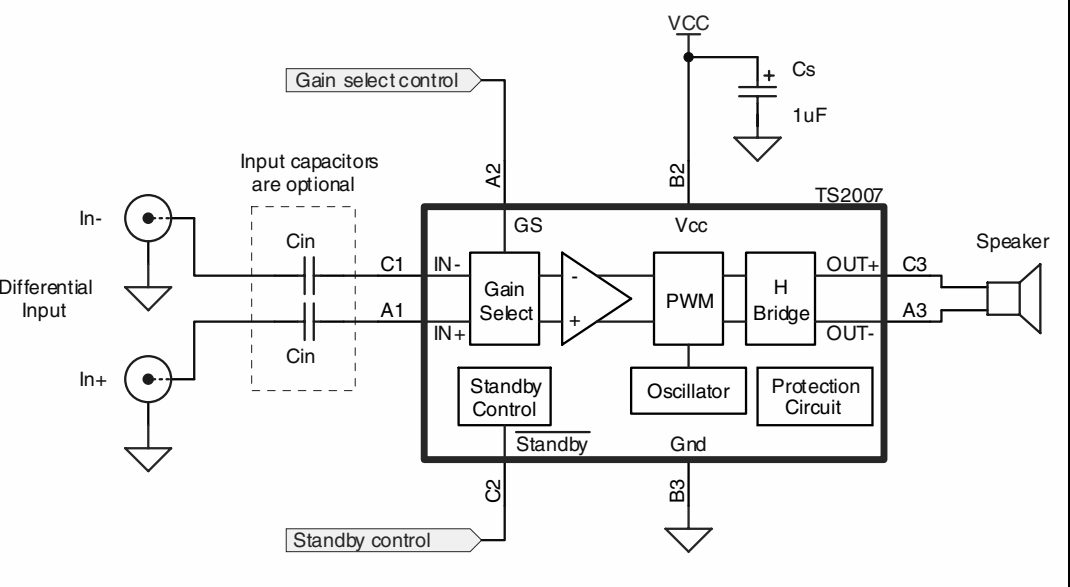
VCC
Cs
1uF
Gain select control
Input capacitors
are optional
A2
B2
TS2007
In-
Cin
GS
Vcc
Speaker
C1
IN-
Gain
Select
PWM
H
Bridge
OUT+
C3
Differential
Input
A1
IN+
OUT-
A3
Cin
In+
Standby
Control
Oscillator
Protection
Circuit
Standby
Gnd
C2
B3
Standby control