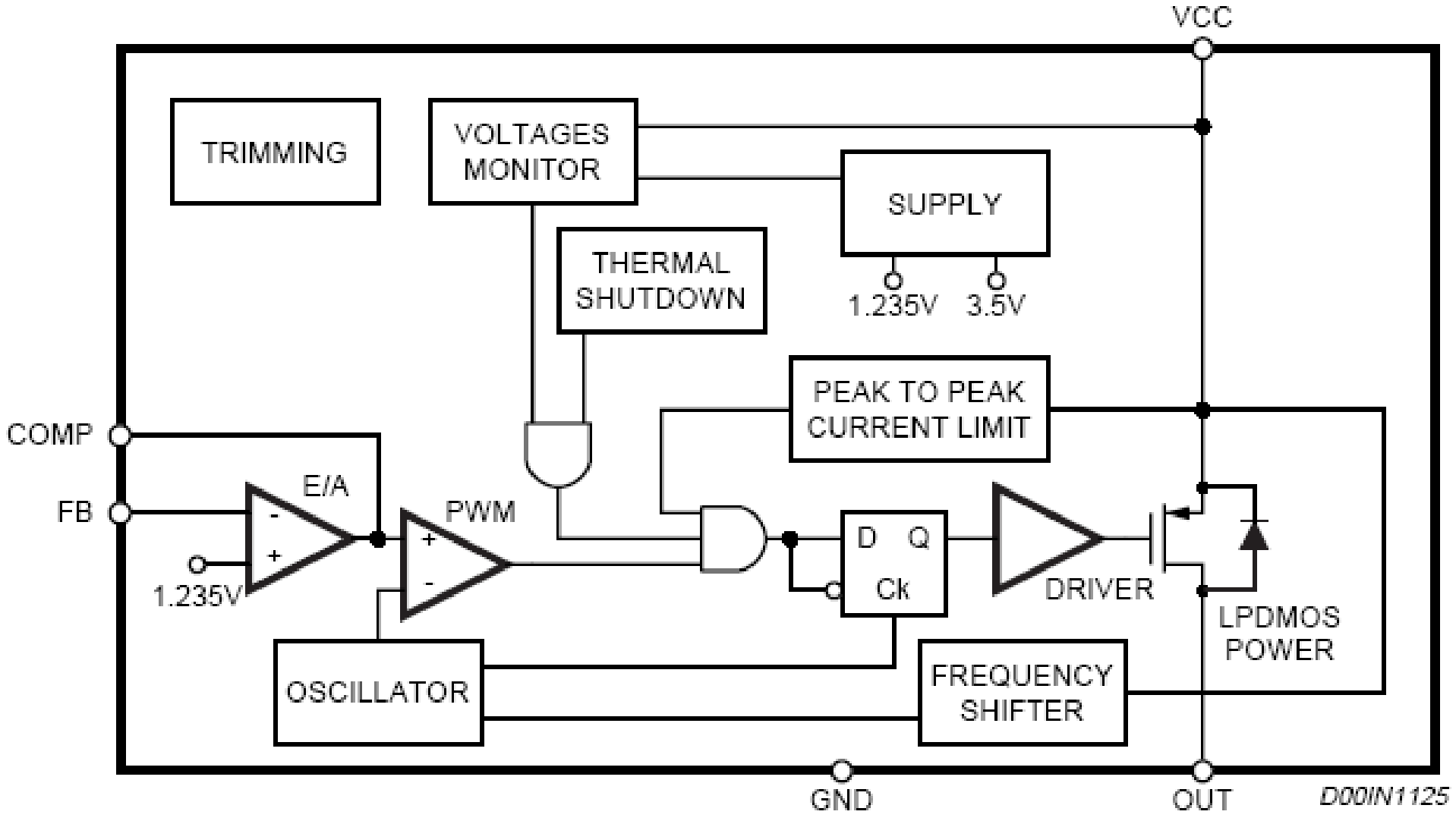
VCC
TRIMMING
VOLTAGES MONITOR
SUPPLY
THERMAL SHUTDOWN
1.235V
3.5V
PEAK TO PEAK CURRENT LIMIT
COMP
FB
E/A
PWM
1.235V
D
Q
Ck
DRIVER
LPDMOS POWER
OSCILLATOR
FREQUENCY SHIFTER
GND
OUT
D00IN1125