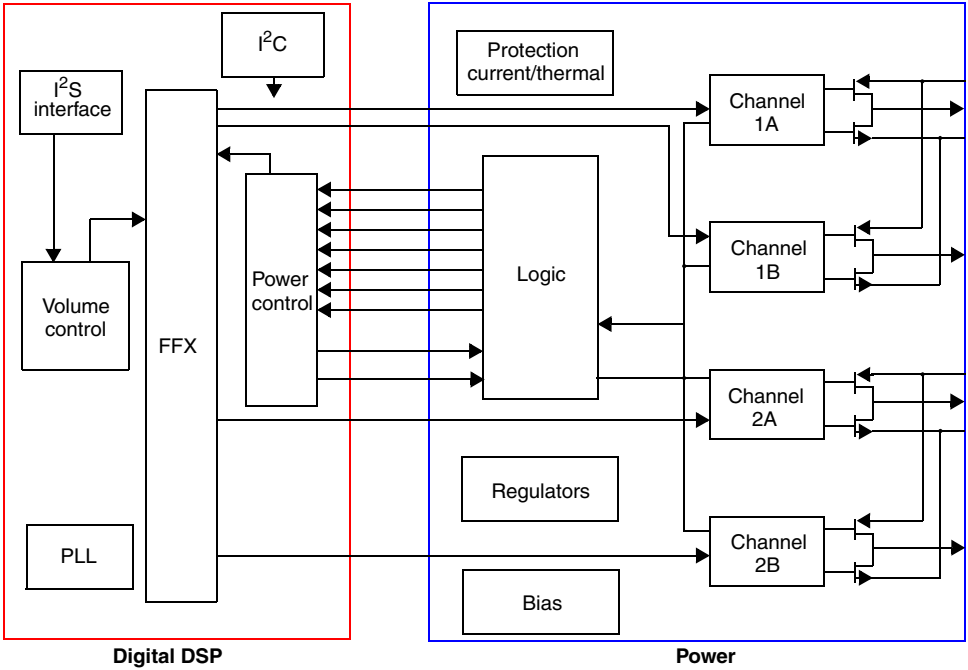
I2C
I2S interface
Volume control
FFX
Power control
PLL
Protection current/thermal
Logic
Regulators
Bias
Channel 1A
Channel 1B
Channel 2A
Channel 2B
Digital DSP
Power