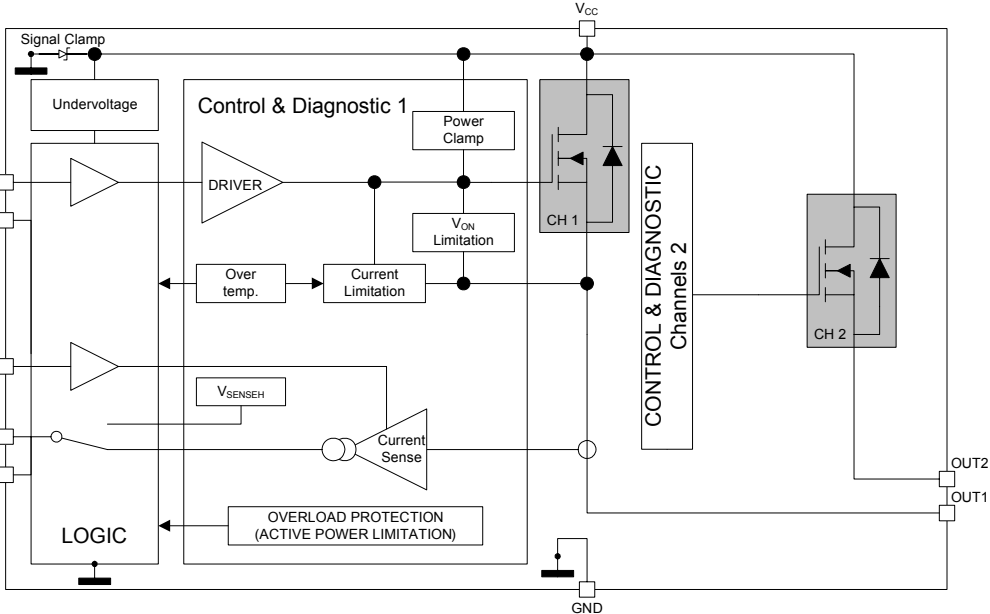
VCC
Signal Clamp
Undervoltage
Control & Diagnostic 1
Power Clamp
IN1
IN2
DRIVER
VON Limitation
CH 1
CONTROL & DIAGNOSTIC Channels 2
CH 2
Over temp.
Current Limitation
CS DIS
VSENSEH
CS1
CS2
Current Sense
OUT2
OUT1
LOGIC
OVERLOAD PROTECTION (ACTIVE POWER LIMITATION)
GND