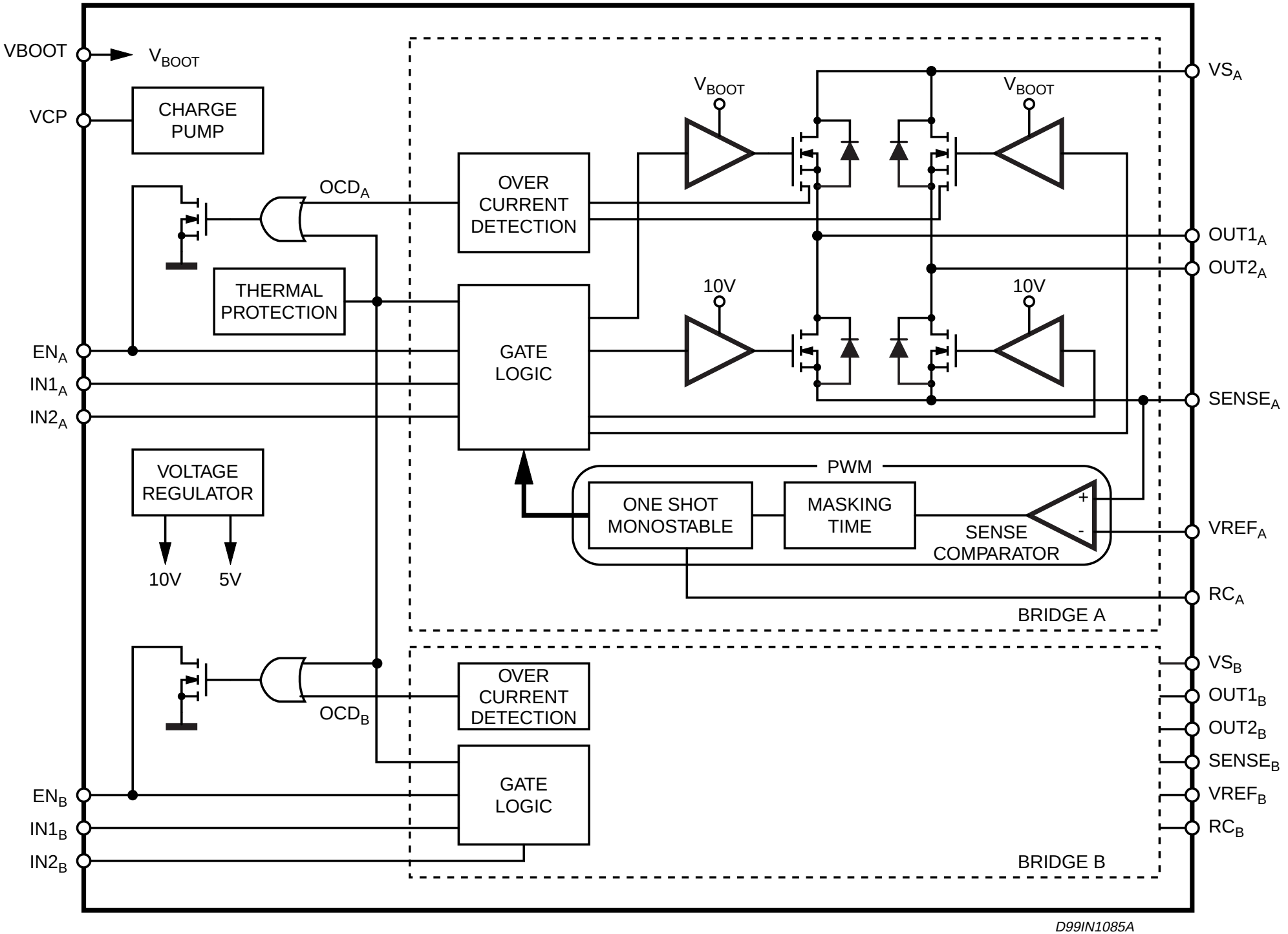
VBOOT
$V_{BOOT}$
VCP
CHARGE PUMP
$OCD_A$
THERMAL PROTECTION
$EN_A$
$IN1_A$
$IN2_A$
VOLTAGE REGULATOR
10V
5V
$OCD_B$
$EN_B$
$IN1_B$
$IN2_B$
OVER CURRENT DETECTION
GATE LOGIC
$V_{BOOT}$
$V_{BOOT}$
10V
10V
PWM
ONE SHOT MONOSTABLE
MASKING TIME
SENSE COMPARATOR
+
-
BRIDGE A
OVER CURRENT DETECTION
GATE LOGIC
BRIDGE B
$VS_A$
$OUT1_A$
$OUT2_A$
$SENSE_A$
$VREF_A$
$RC_A$
$VS_B$
$OUT1_B$
$OUT2_B$
$SENSE_B$
$VREF_B$
$RC_B$
D99IN1085A