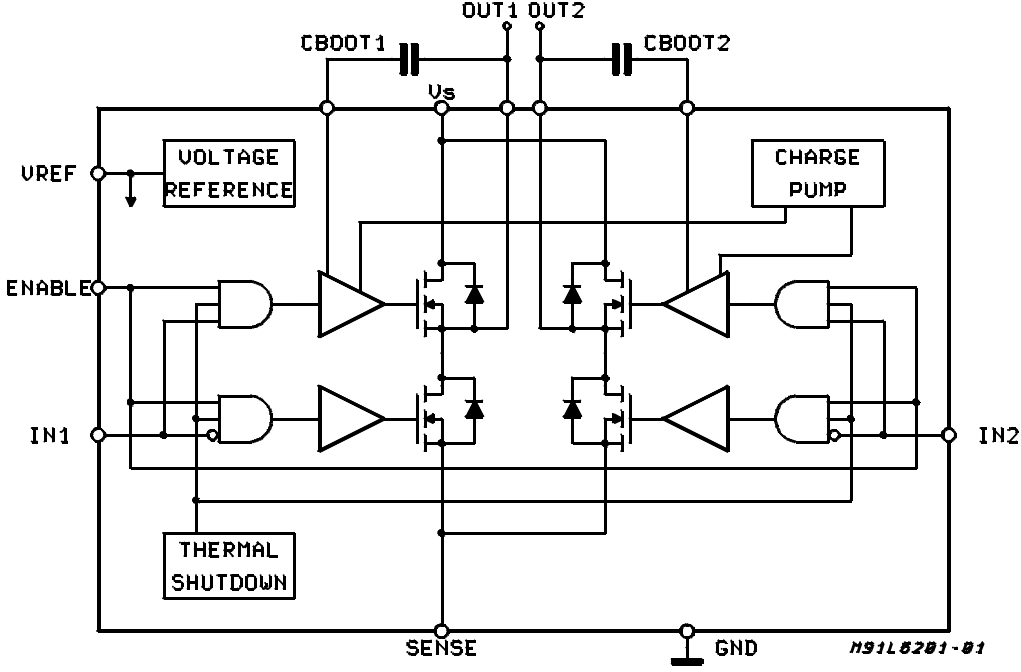
OUT1
OUT2
CBOOT1
CBOOT2
Vs
VREF
VOLTAGE REFERENCE
CHARGE PUMP
ENABLE
IN1
IN2
THERMAL SHUTDOWN
SENSE
GND
M91L6201-01