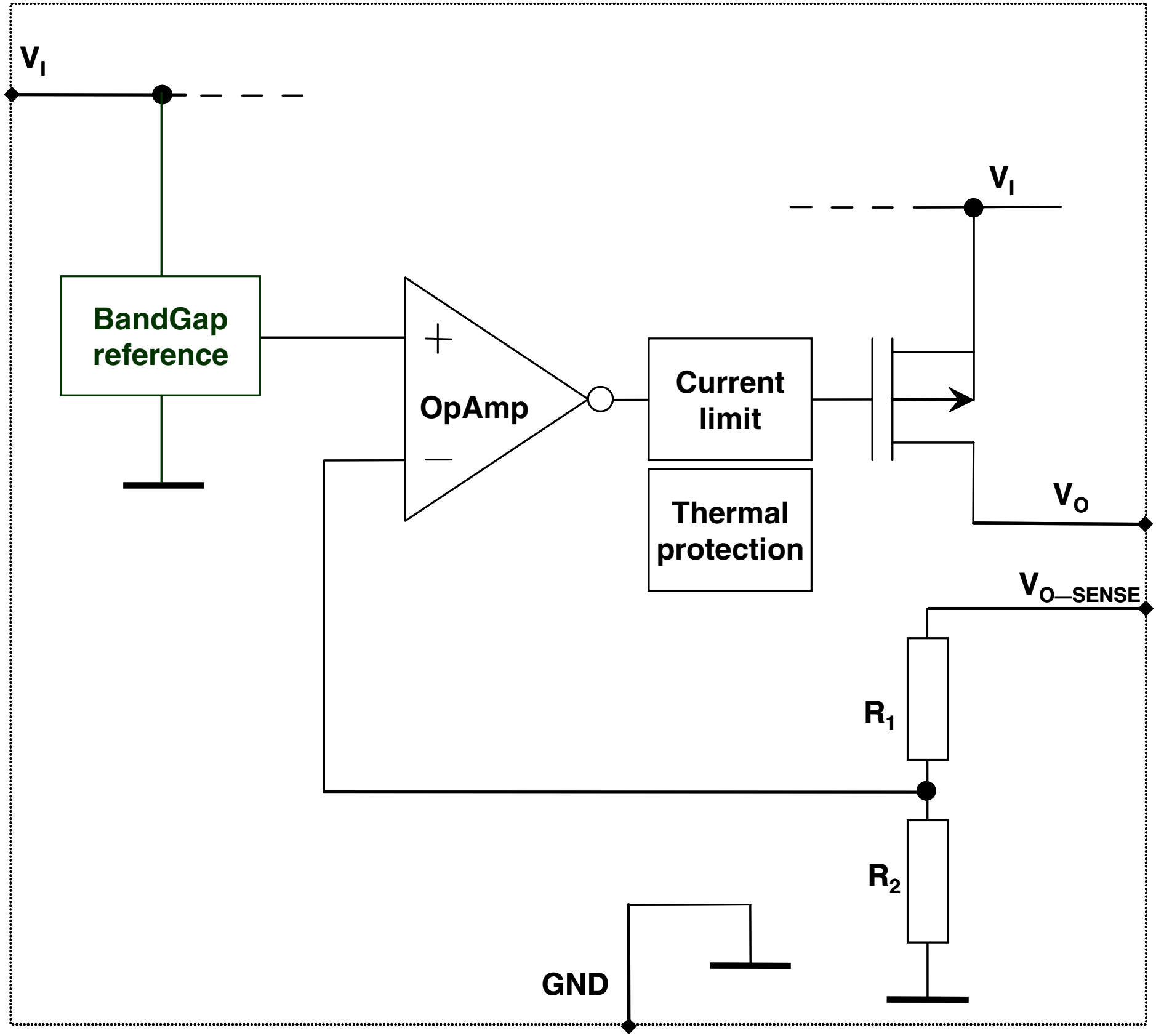
$V_I$
$V_I$
BandGap reference
+
OpAmp
−
Current limit
Thermal protection
$V_O$
$V_{O-SENSE}$
$R_1$
$R_2$
GND