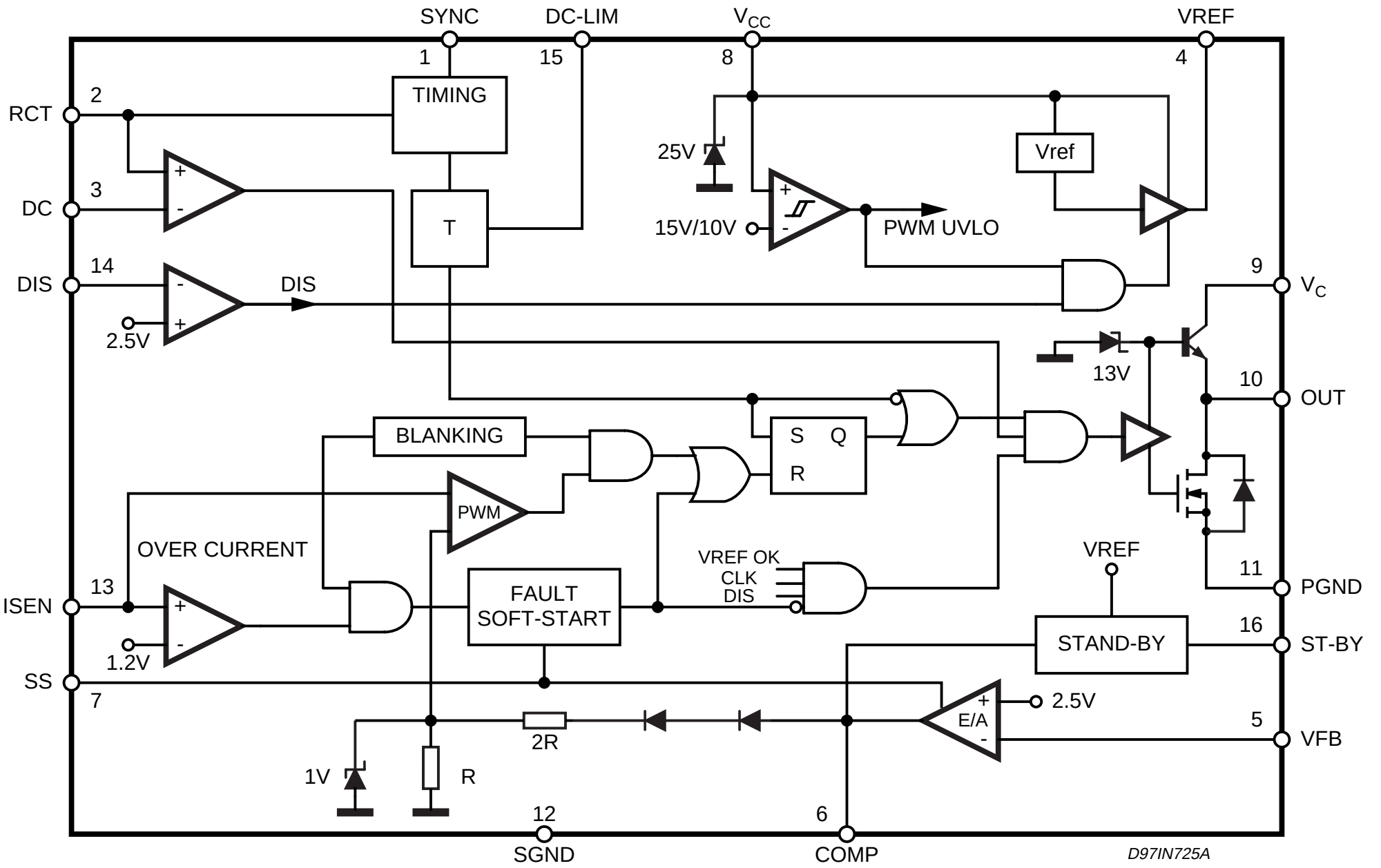
SYNC
DC-LIM
VCC
VREF
1
15
8
4
RCT
2
TIMING
DC
3
T
25V
Vref
15V/10V
PWM UVLO
DIS
14
DIS
2.5V
9
VC
13V
10
OUT
BLANKING
S
Q
R
PWM
OVER CURRENT
VREF OK
CLK
DIS
VREF
11
PGND
ISEN
13
FAULT
SOFT-START
STAND-BY
16
ST-BY
1.2V
SS
7
2.5V
E/A
5
VFB
2R
1V
R
12
6
SGND
COMP
D97IN725A