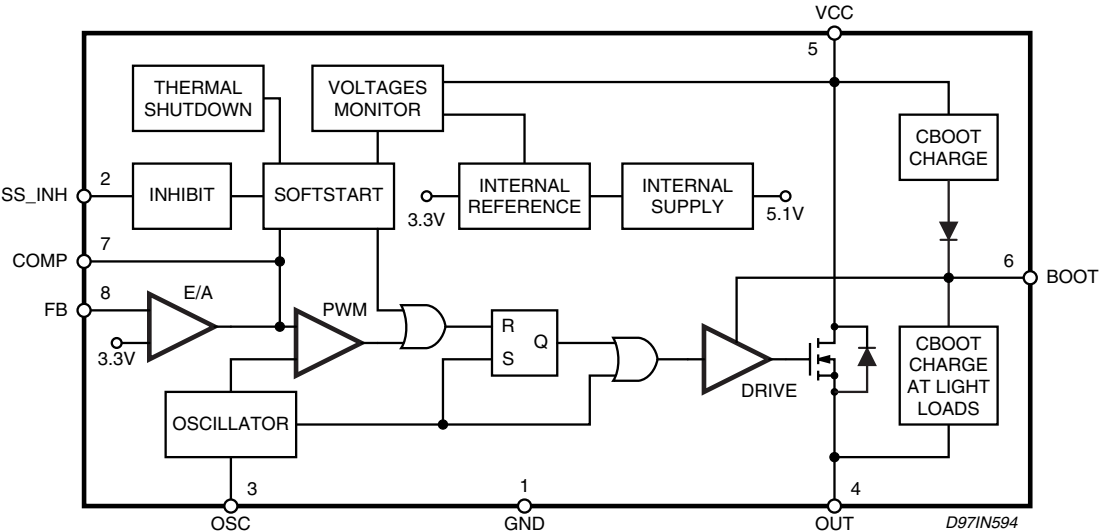
VCC
5
THERMAL SHUTDOWN
VOLTAGES MONITOR
CBOOT CHARGE
SS_INH
2
INHIBIT
SOFTSTART
3.3V
INTERNAL REFERENCE
INTERNAL SUPPLY
5.1V
COMP
7
6
BOOT
FB
8
E/A
PWM
R
Q
S
3.3V
DRIVE
CBOOT CHARGE AT LIGHT LOADS
OSCILLATOR
3
1
4
OSC
GND
OUT
D97IN594