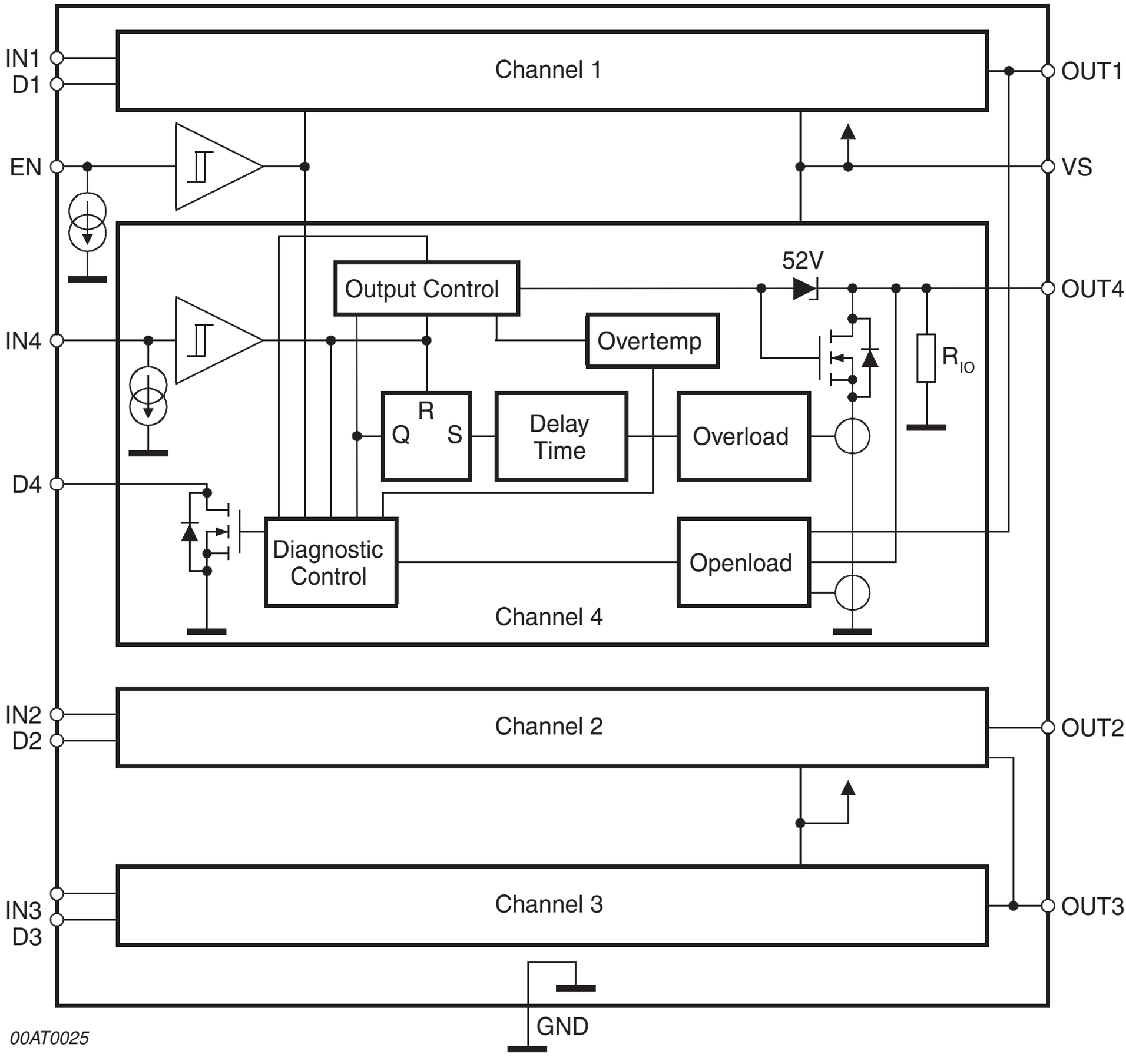
IN1
D1
Channel 1
OUT1
EN
VS
Output Control
52V
OUT4
IN4
Overtemp
R_{IO}
R
Q
S
Delay
Time
Overload
D4
Diagnostic
Control
Openload
Channel 4
IN2
D2
Channel 2
OUT2
IN3
D3
Channel 3
OUT3
GND
00AT0025