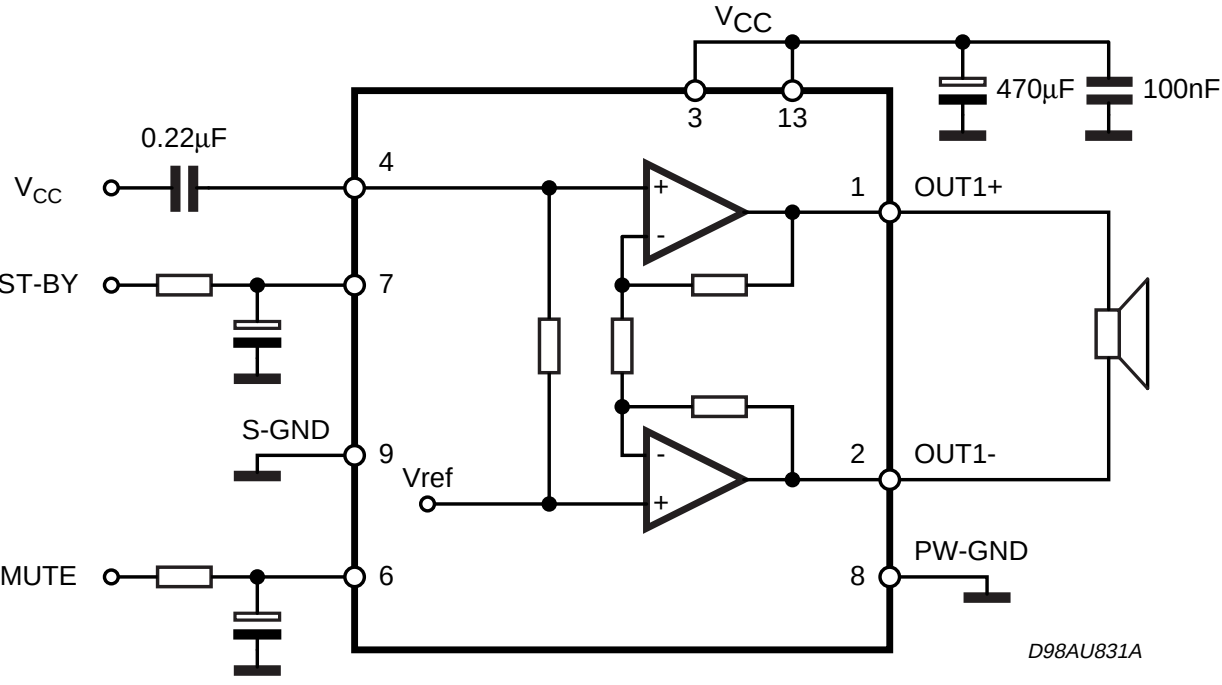
VCC
470µF
100nF
3
13
0.22µF
4
VCC
1
OUT1+
ST-BY
7
S-GND
9
Vref
2
OUT1-
MUTE
6
8
PW-GND
D98AU831A