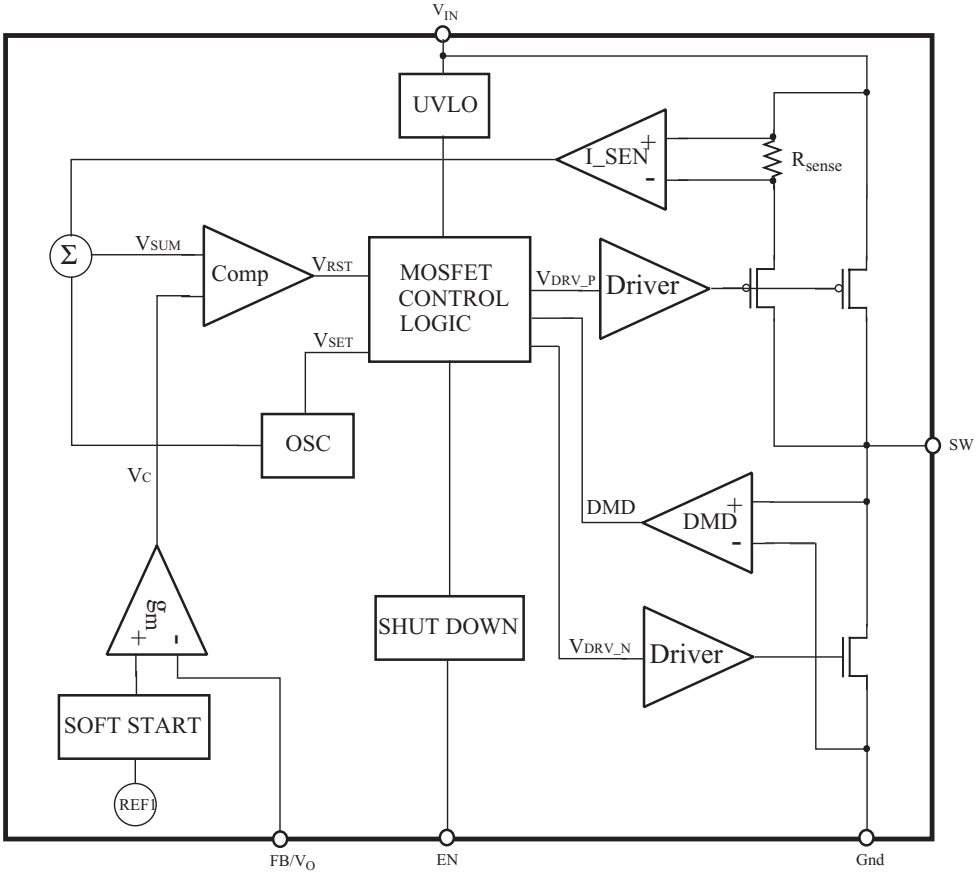
VIN
UVLO
I_SEN
+
-
Rsense
Σ
VSUM
Comp
VRST
MOSFET
CONTROL
LOGIC
VDRV_P
Driver
VSET
OSC
SW
VC
DMD
DMD
+
-
gm
+
-
SHUT DOWN
VDRV_N
Driver
SOFT START
REF1
FB/VO
EN
Gnd