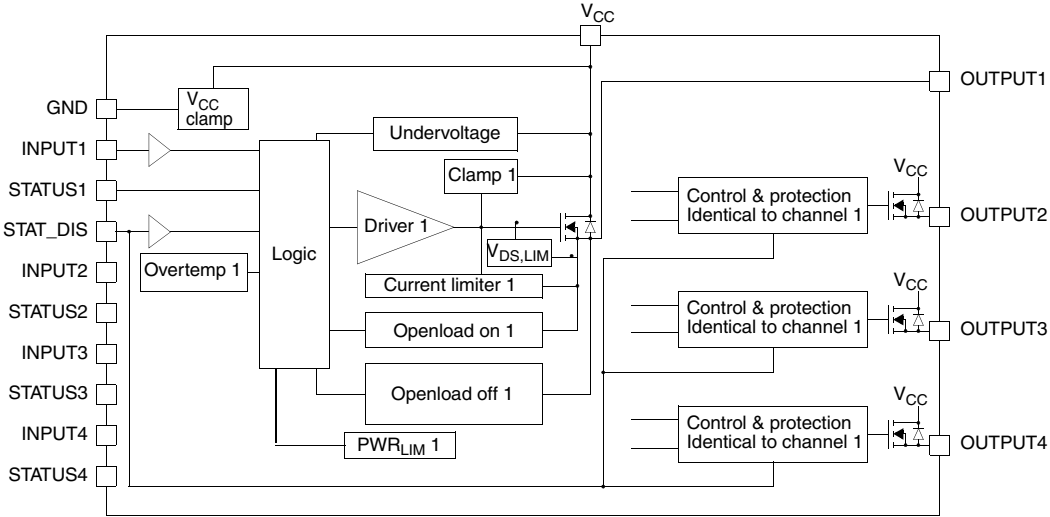
VCC
GND
INPUT1
STATUS1
STAT_DIS
INPUT2
STATUS2
INPUT3
STATUS3
INPUT4
STATUS4
VCC clamp
Undervoltage
Clamp 1
Logic
Driver 1
Overtemp 1
VDS,LIM
Current limiter 1
Openload on 1
Openload off 1
PWRLIM 1
Control & protection Identical to channel 1
Control & protection Identical to channel 1
Control & protection Identical to channel 1
VCC
VCC
VCC
OUTPUT1
OUTPUT2
OUTPUT3
OUTPUT4