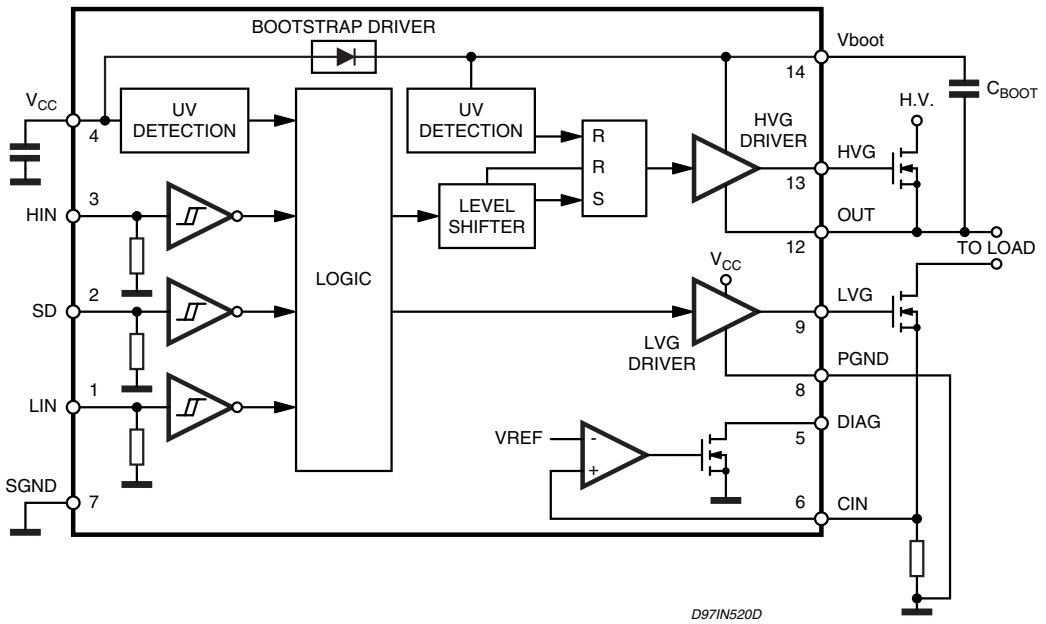
BOOTSTRAP DRIVER
Vboot
14
C_{BOOT}
V_{CC}
4
UV DETECTION
UV DETECTION
R
R
S
HVG DRIVER
H.V.
HVG
13
OUT
12
TO LOAD
3
HIN
LEVEL SHIFTER
LOGIC
V_{CC}
2
SD
LVG
9
LVG DRIVER
PGND
8
1
LIN
DIAG
5
VREF
-
+
SGND
7
6
CIN
D97IN520D