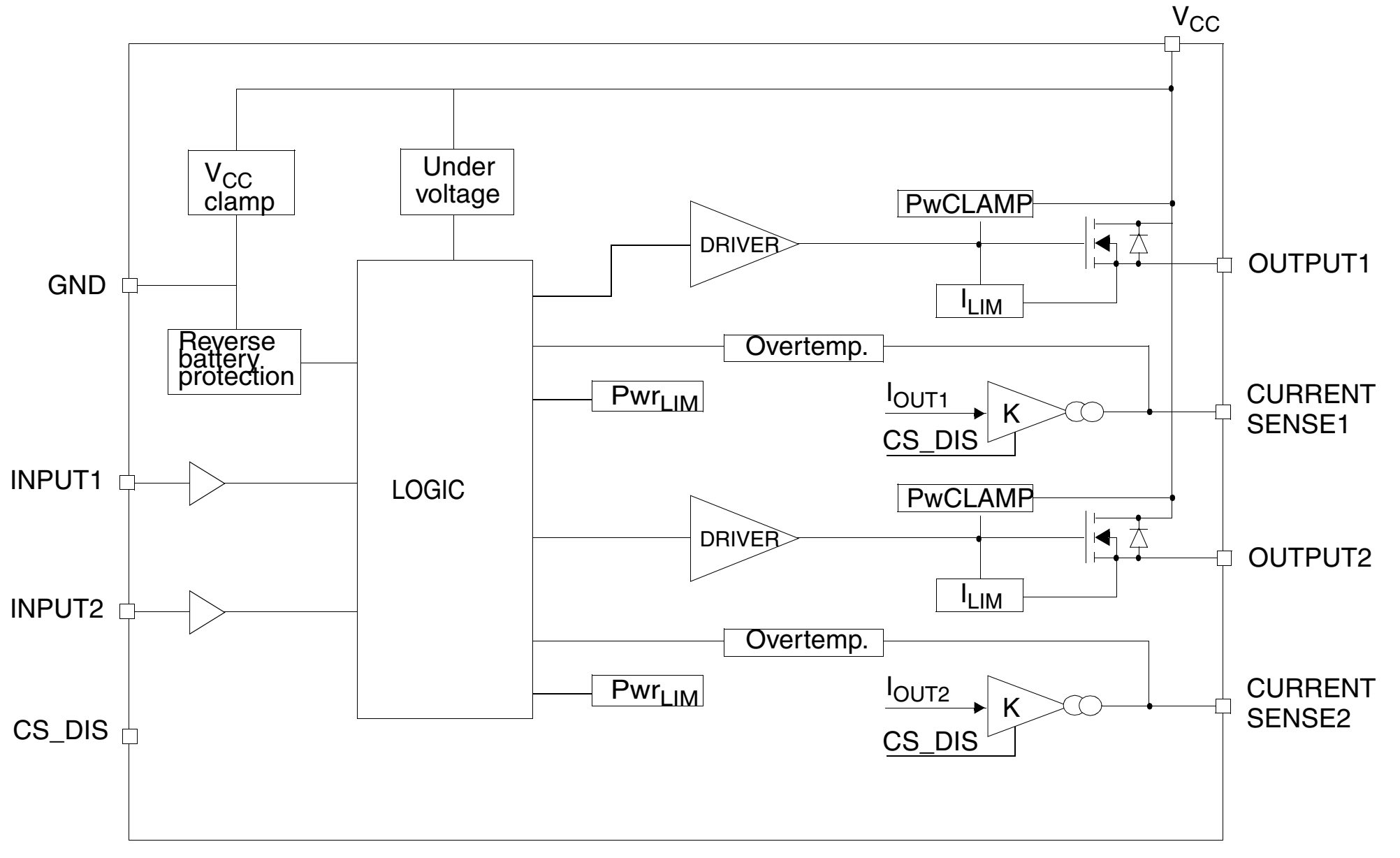
VCC
VCC clamp
Under voltage
PwCLAMP
DRIVER
OUTPUT1
GND
ILIM
Reverse battery protection
Overtemp.
PwrLIM
IOUT1
K
CS_DIS
CURRENT SENSE1
INPUT1
LOGIC
PwCLAMP
DRIVER
OUTPUT2
ILIM
INPUT2
Overtemp.
PwrLIM
IOUT2
K
CS_DIS
CURRENT SENSE2
CS_DIS