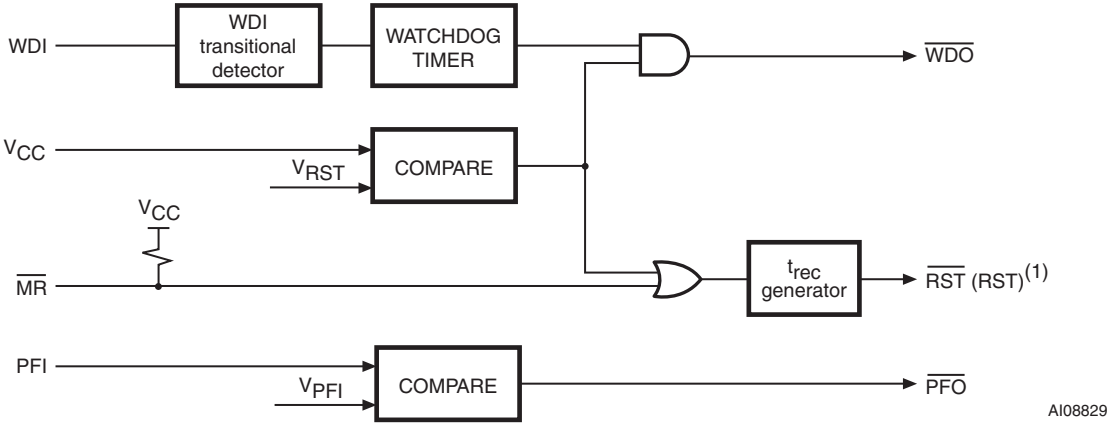
WDI
WDI transitional detector
WATCHDOG TIMER
WDO
VCC
VRST
COMPARE
VCC
MR
trec generator
RST (RST)(1)
PFI
VPFI
COMPARE
PFO
AI08829