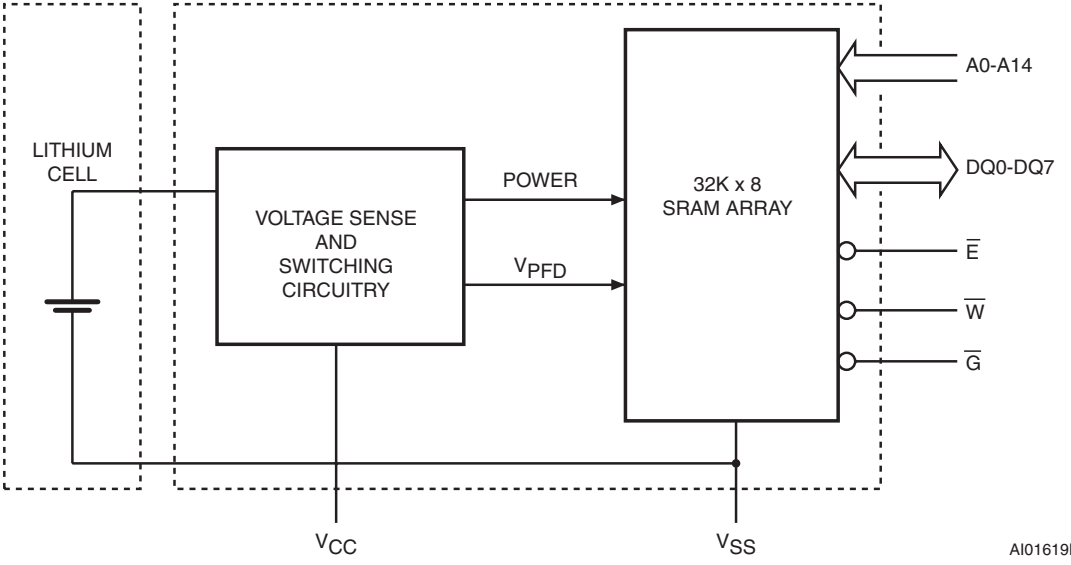
LITHIUM
CELL
VOLTAGE SENSE
AND
SWITCHING
CIRCUITRY
POWER
VPFD
32K x 8
SRAM ARRAY
A0-A14
DQ0-DQ7
E
W
G
VCC
VSS
AI01619B