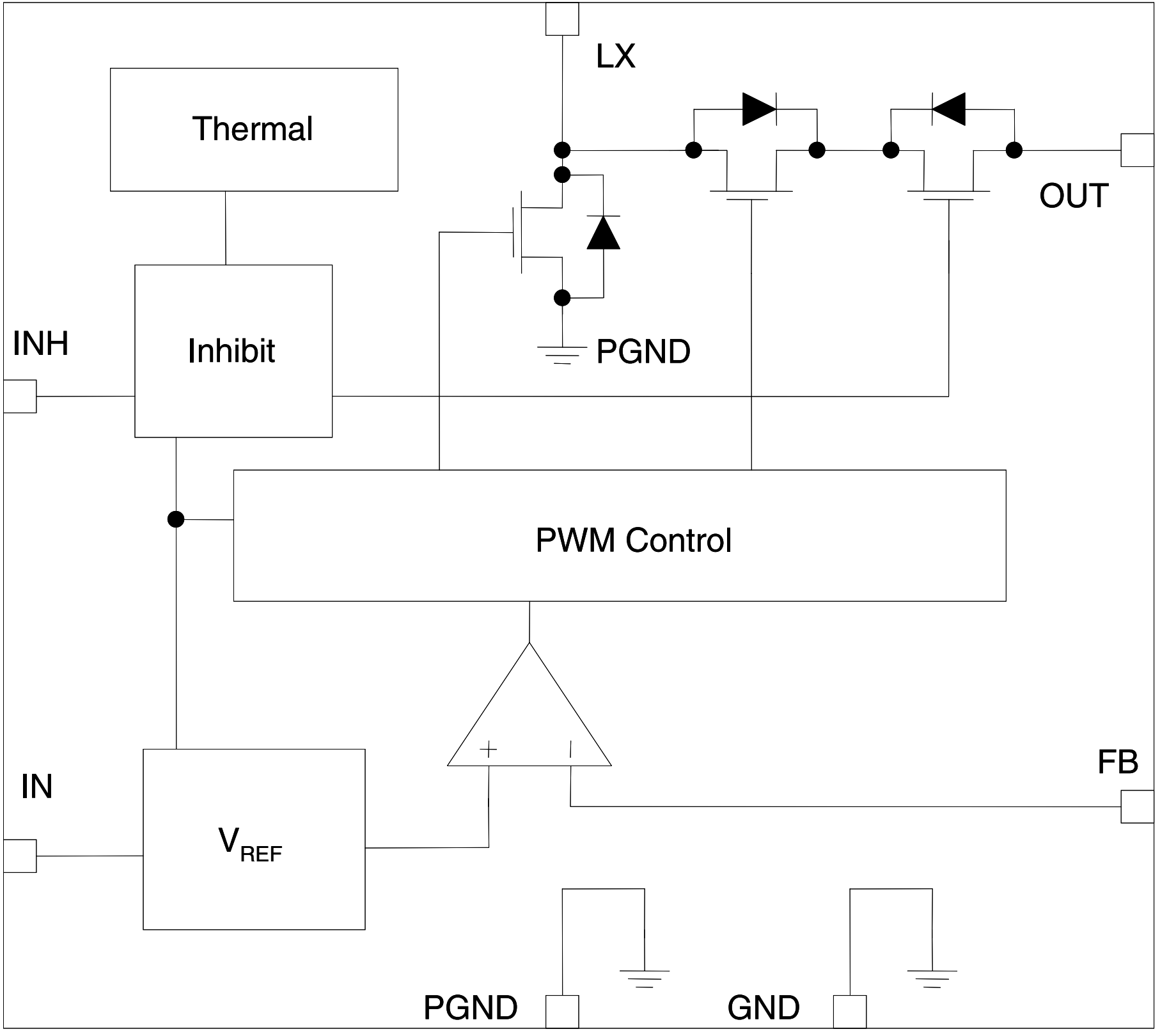
LX
Thermal
OUT
INH
Inhibit
PGND
PWM Control
FB
IN
V_{REF}
PGND
GND