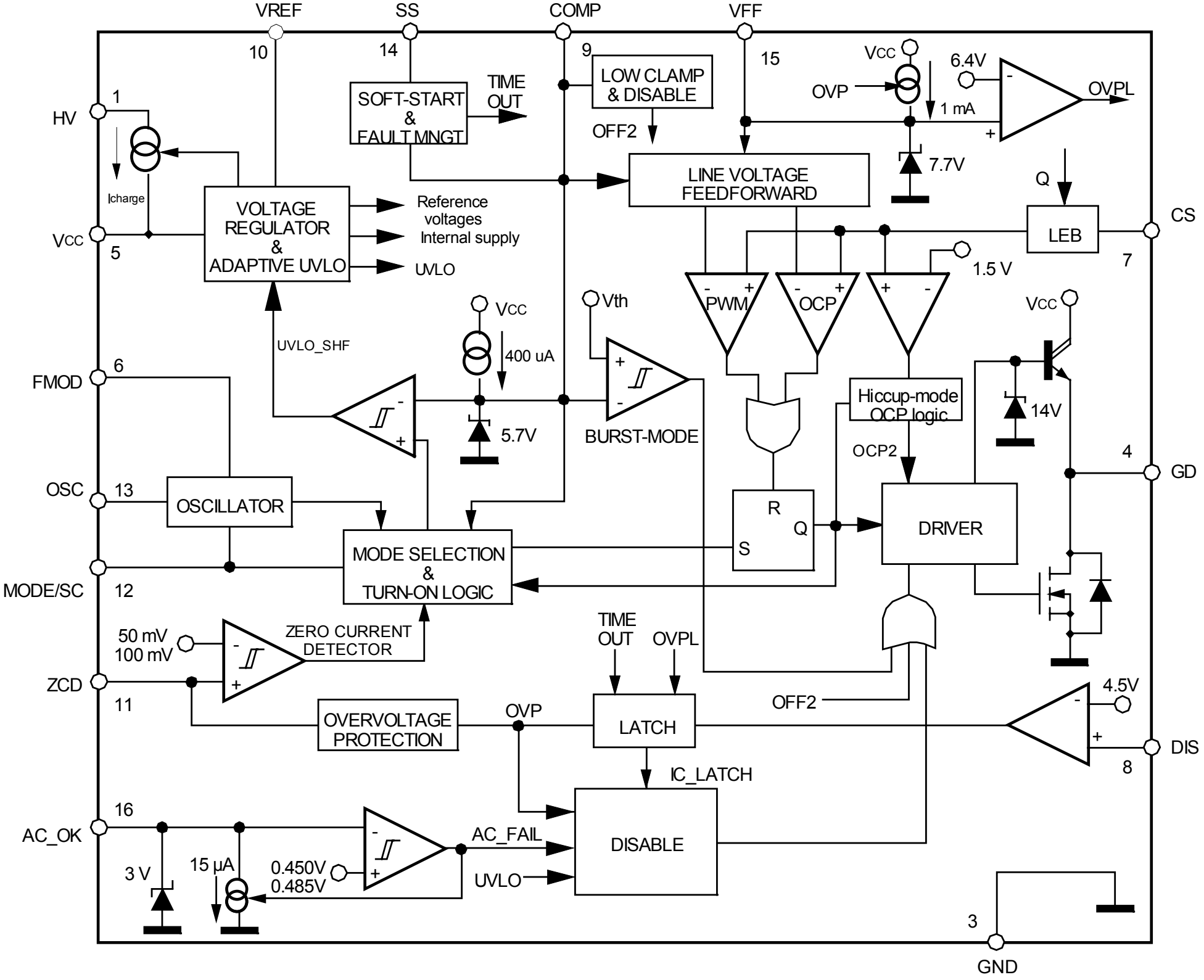
VREF
SS
COMP
VFF
10
14
9
15
HV
1
Icharge
Vcc
5
SOFT-START & FAULT MNGT
TIME OUT
LOW CLAMP & DISABLE
OFF2
Vcc
OVP
1 mA
6.4V
OVPL
7.7V
LINE VOLTAGE FEEDFORWARD
Q
LEB
CS
7
VOLTAGE REGULATOR & ADAPTIVE UVLO
Reference voltages
Internal supply
UVLO
PWM
OCP
1.5 V
Vcc
UVLO_SHF
Vcc
400 uA
Vth
FMOD
6
5.7V
BURST-MODE
Hiccup-mode OCP logic
14V
OCP2
4
GD
OSC
13
OSCILLATOR
R
Q
S
DRIVER
MODE SELECTION & TURN-ON LOGIC
MODE/SC
12
50 mV
100 mV
ZERO CURRENT DETECTOR
TIME OUT
OVPL
ZCD
11
OVERVOLTAGE PROTECTION
OVP
LATCH
OFF2
4.5V
DIS
8
IC_LATCH
16
AC_OK
AC_FAIL
DISABLE
3 V
15 µA
0.450V
0.485V
UVLO
3
GND