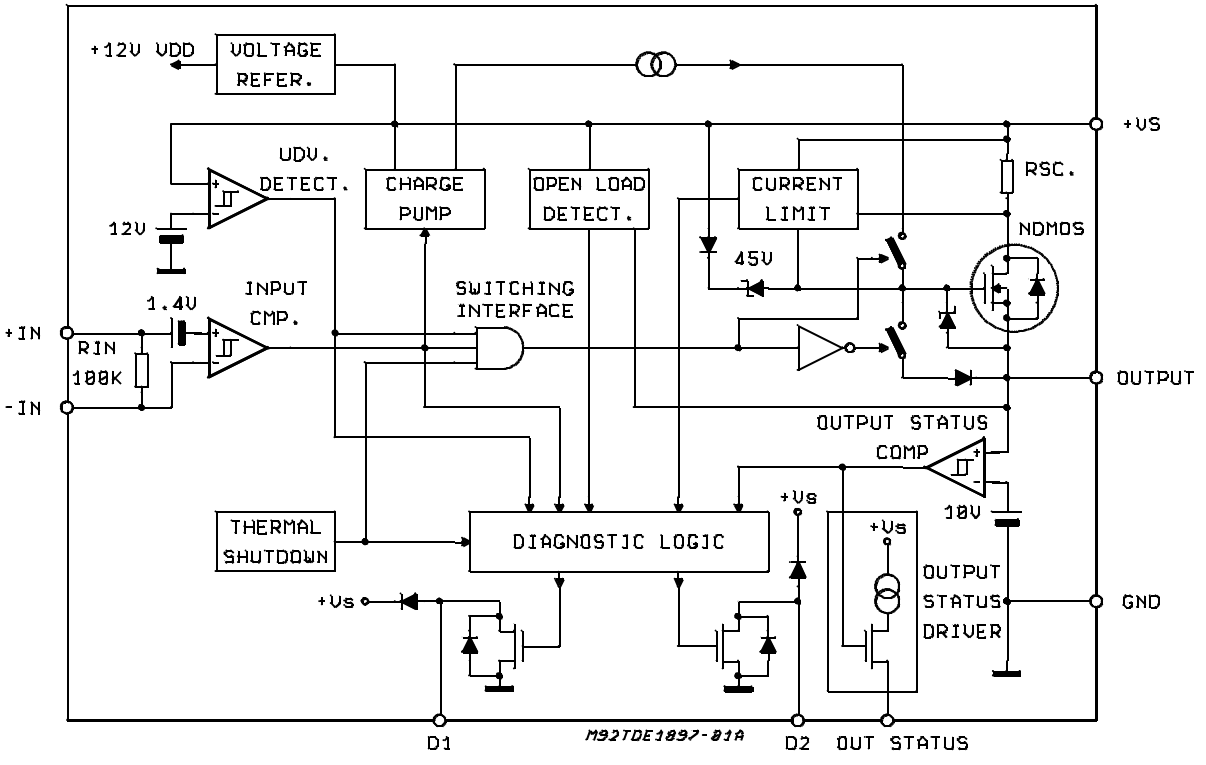
+12V VDD
VOLTAGE REFER.
+VS
UDV. DETECT.
CHARGE PUMP
OPEN LOAD DETECT.
CURRENT LIMIT
RSC.
12V
NDMOS
45V
INPUT CMP.
SWITCHING INTERFACE
1.4V
+IN
RIN 100K
-IN
OUTPUT
OUTPUT STATUS COMP
10V
+Vs
THERMAL SHUTDOWN
DIAGNOSTIC LOGIC
+Vs
OUTPUT STATUS DRIVER
GND
+Vs
D1
M92TDE1897-01A
D2
OUT STATUS