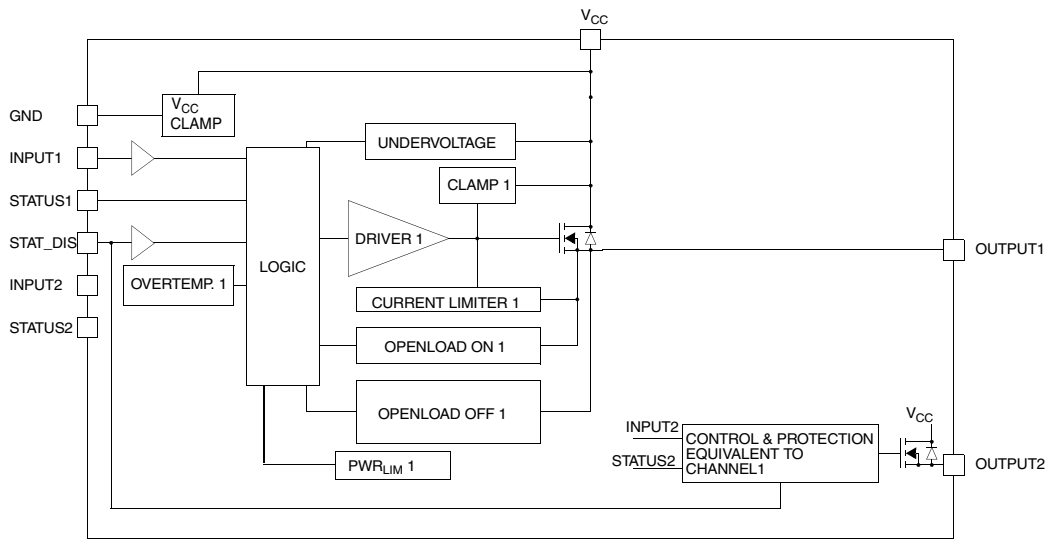
VCC
GND
VCC CLAMP
INPUT1
STATUS1
STAT_DIS
INPUT2
STATUS2
OVERTEMP. 1
LOGIC
UNDERVOLTAGE
CLAMP 1
DRIVER 1
CURRENT LIMITER 1
OPENLOAD ON 1
OPENLOAD OFF 1
PWRLIM 1
OUTPUT1
INPUT2
STATUS2
CONTROL & PROTECTION EQUIVALENT TO CHANNEL1
VCC
OUTPUT2