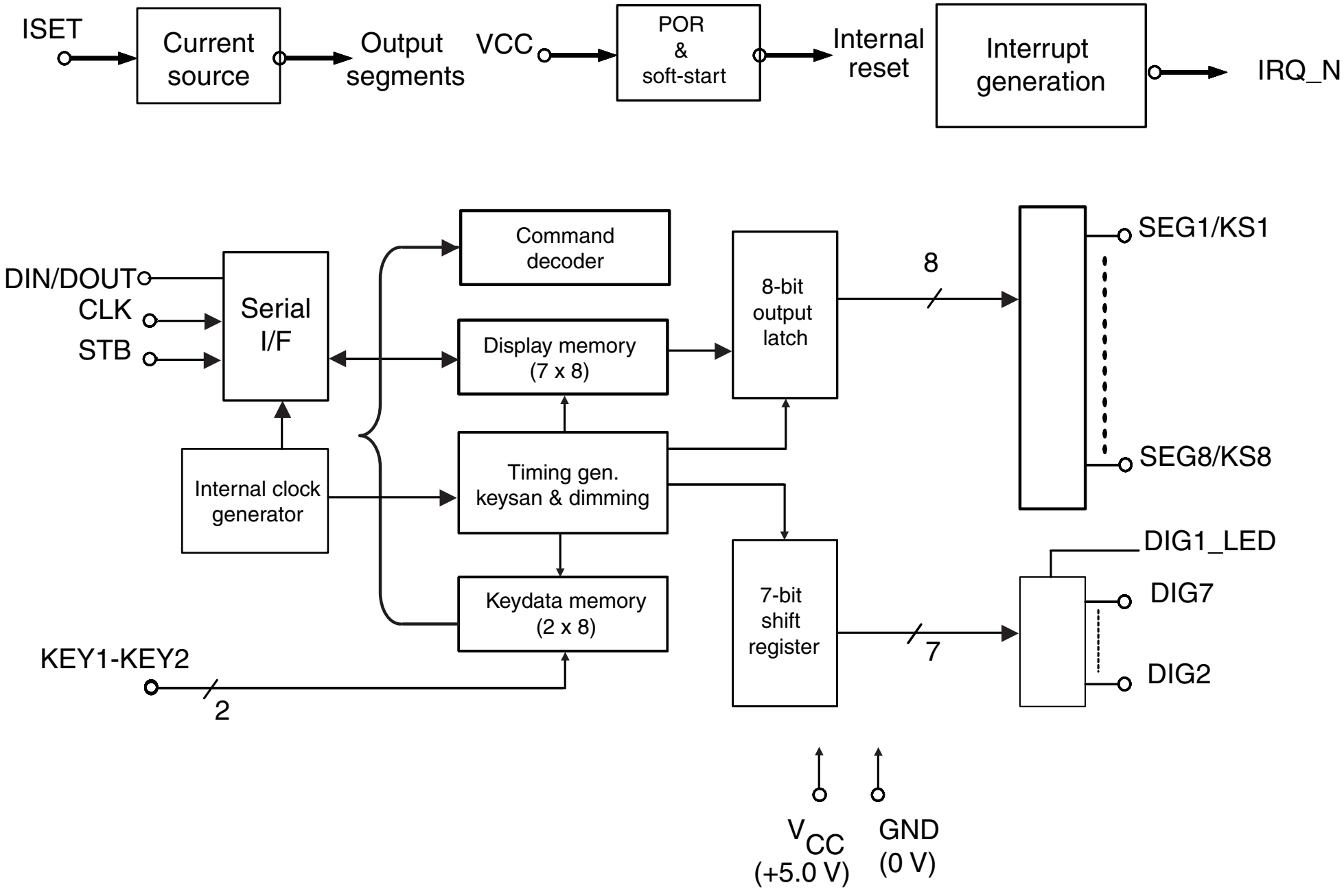
ISET
Current source
Output segments
VCC
POR & soft-start
Internal reset
Interrupt generation
IRQ_N
DIN/DOUT
CLK
STB
Serial I/F
Command decoder
Display memory (7 x 8)
Timing gen. keysan & dimming
Keydata memory (2 x 8)
Internal clock generator
8-bit output latch
8
SEG1/KS1
SEG8/KS8
7-bit shift register
7
DIG1_LED
DIG7
DIG2
KEY1-KEY2
2
VCC (+5.0 V)
GND (0 V)