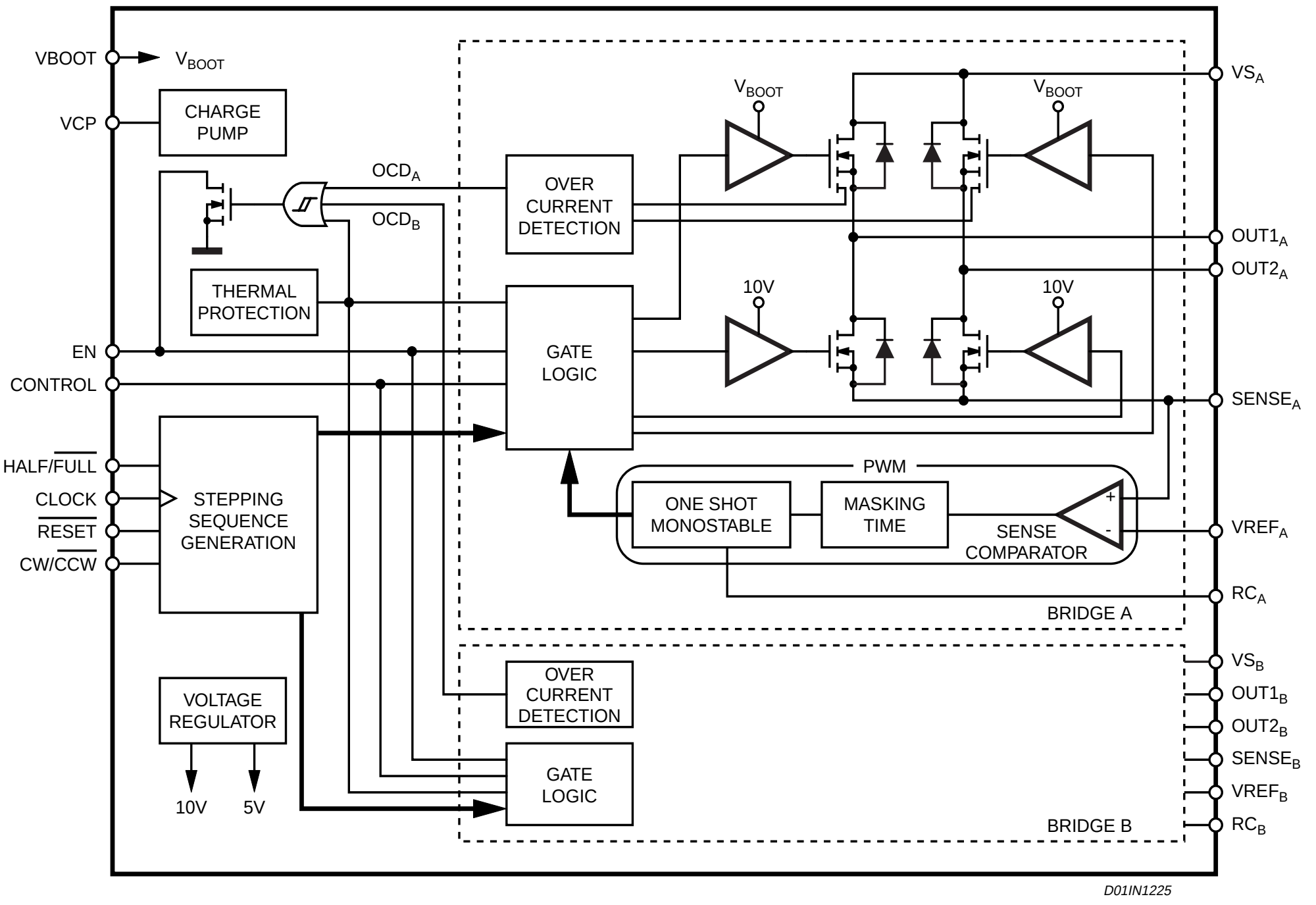
VBOOT
V_{BOOT}
VCP
CHARGE PUMP
OCD_A
OCD_B
THERMAL PROTECTION
EN
CONTROL
HALF/FULL
CLOCK
RESET
CW/CCW
STEPPING SEQUENCE GENERATION
VOLTAGE REGULATOR
10V
5V
OVER CURRENT DETECTION
GATE LOGIC
V_{BOOT}
V_{BOOT}
10V
10V
PWM
ONE SHOT MONOSTABLE
MASKING TIME
SENSE COMPARATOR
+
-
BRIDGE A
OVER CURRENT DETECTION
GATE LOGIC
BRIDGE B
VS_A
$OUT1_A$
$OUT2_A$
$SENSE_A$
$VREF_A$
RC_A
VS_B
$OUT1_B$
$OUT2_B$
$SENSE_B$
$VREF_B$
RC_B
D01IN1225